G61MPVT SERIES UNITS

G61MPVT series units are 230 volt 50HZ high-efficiency multi-position (downflow, horizontal right and left) gas furnaces manufactured with Lennox Duralok Plus™ heat exchangers formed of an aluminized steel primary with a stainless steel secondary condensing coil. G61MPVT units are available in heating capacities of 66,000 to 132,000 Btuh (19.3 to 38.6 kW) and cooling applications from 2 to 5 tons (7.0 kW to 17.5 kW). Refer to Engineering Handbook for proper sizing.

Units are factory equipped for use with natural gas. Kits are available for conversion to LPG operation. G61MPVT model units are equipped with a two-stage variable speed integrated ignition control. All units use a redundant gas valve to assure safety shut-off.

All specifications in this manual are subject to change. Procedures outlined in this manual are presented as a recommendation only and do not supersede or replace local or state codes. In the absence of local or state codes, the guidelines and procedures outlined in this manual (except where noted) are recommendations only and do not constitute code.

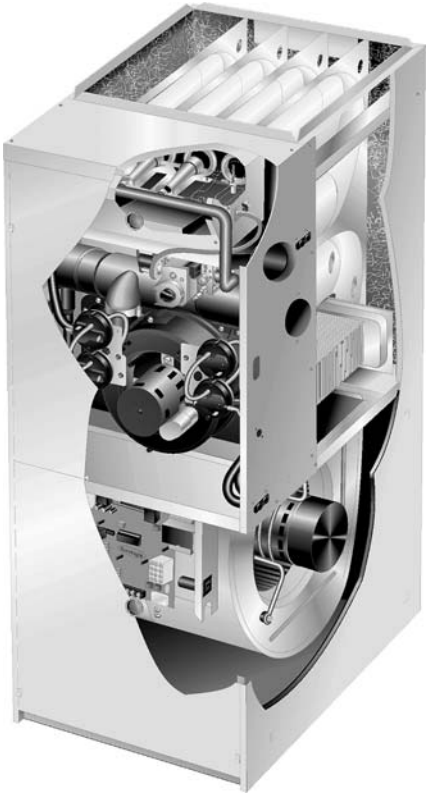

TABLE OF CONTENTS

⚠ IMPORTANT

Improper installation, adjustment, alteration, service or maintenance can cause property damage, personal injury or loss of life. Installation and service must be performed by a qualified installer, service agency or the gas supplier.

⚠ WARNING

Electric shock hazard. Can cause injury or death. Before attempting to perform any service or maintenance, turn the electrical power to unit OFF at disconnect switch(es). Unit may have multiple power supplies.

⚠ WARNING

Sharp edges.
Be careful when servicing unit to avoid sharp edges which may result in personal injury.

G61MPVT PARTS ARRANGEMENT

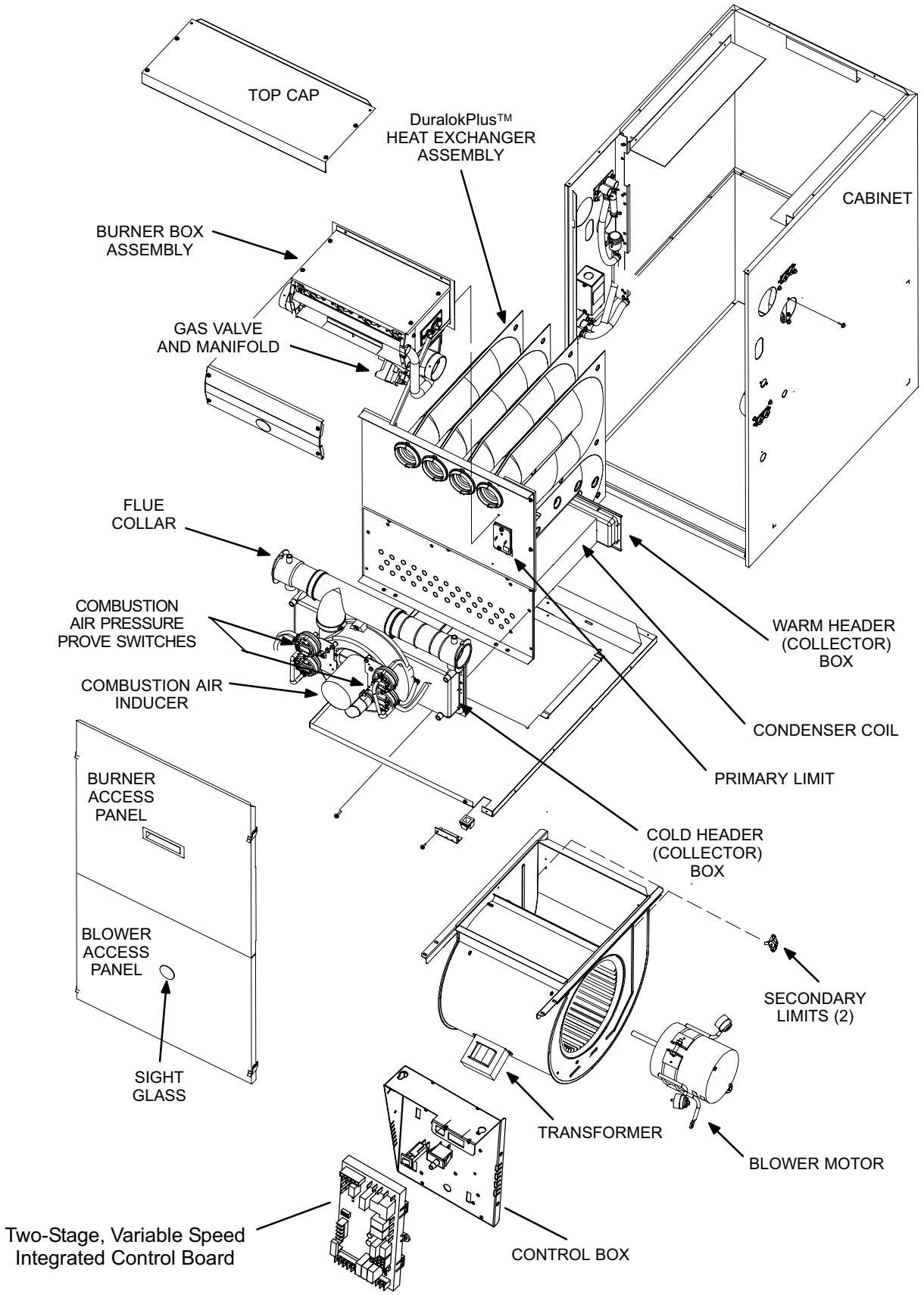

FIGURE 1

I-UNIT COMPONENTS

G61MPVT unit components are shown in figure 1. The gas valve, combustion air inducer and burners can be accessed by removing the burner access panel. Electrical components are in the control box (figure 2) found in the blower section.

G61MPVT units are factory equipped with a bottom return air panel in place. The panel is designed to be field removed as required for bottom air return. Markings are provided for side return air and may be cut out in the field.

ELECTROSTATIC DISCHARGE (ESD)
Precautions and Procedures

⚠ CAUTION

Electrostatic discharge can affect electronic components. Take precautions during furnace installation and service to protect the furnace's electronic controls. Precautions will help to avoid control exposure to electrostatic discharge by putting the furnace, the control and the technician at the same electrostatic potential. Neutralize electrostatic charge by touching hand and all tools on an unpainted unit surface, such as the gas valve or blower deck, before performing any service procedure.

A-Control Box

1. Control Transformer (T1)

A transformer located in the control box provides power to the low voltage section of the unit. Transformers on all models are rated 40VA with a 230V primary and a 24V secondary.

2. Door Interlock Switch (S51)

A door interlock switch rated 14A at 230VAC is wired in series with line voltage. When the blower door is removed the unit will shut down.

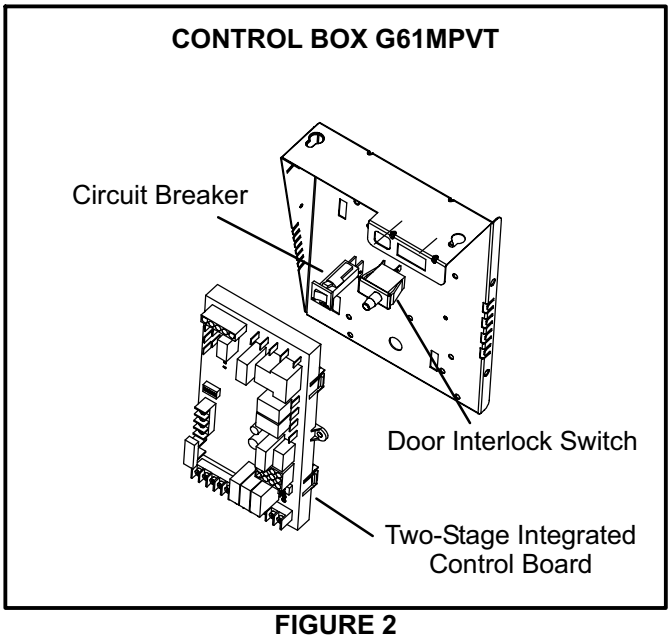

FIGURE 2

3. Circuit Breaker (CB8)

A 24V circuit breaker is also located in the control box. The switch provides overcurrent protection to the transformer (T1). The breaker is rated 3A at 32V. If the current exceeds this limit the breaker will trip and all unit operation will shutdown. The breaker can be manually reset by pressing the button on the face. See figure 3.

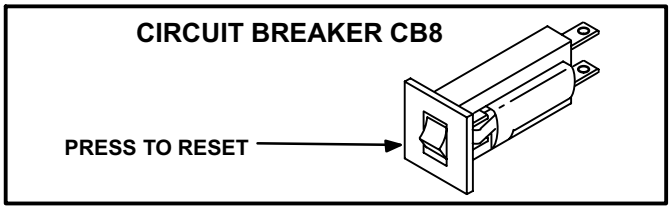

FIGURE 3

⚠ WARNING

Shock hazard.
Disconnect power before servicing. Integrated Control Board is not field repairable. If control is inoperable, simply replace entire control.
Can cause injury or death. Unsafe operation will result if repair is attempted.

4. Integrated Control Board(A92) Control 101018-01 & 101018-02

All units are equipped with the Lennox two-stage, variable speed integrated control board. The system consists of a ignition / blower control board (figure 4) with control pin designations in tables 1, 2 and 3 and ignitor (figure 11). The board and ignitor work in combination to ensure furnace ignition and ignitor durability. The integrated board controls all major furnace operations. The board features a red LED light, for furnace status and troubleshooting. Table 4 shows codes for control 101018-01 and table 5 shows codes for control 101018-02. The LED flashes in "X" + "Y" codes. For example using table 4 under "PRESSURE SWITCH CODES", if the red LED flashes 2 times, then off for 2 seconds then flashes 3 times, the low pressure switch is failed open. 2 green LEDs show indoor blower status and CFM. The board also has two accessory terminals rated at (1) one amp each.

Electronic Ignition

At the beginning of the heat cycle the control monitors the first stage and second stage combustion air inducer prove switch. The control will not begin the heating cycle if the first stage prove switch is closed (by-passed). Likewise the control will not begin the second stage heating cycle if the second stage prove switch is closed, and will remain in first stage heat. However, if the second stage prove switch closes during the first stage heat pre-purge, the control will allow second stage heat. Once the first stage prove switch is determined to be open, the combustion air inducer is energized on low (first stage) heat speed. When the differential in the prove switch is great enough, the prove switch closes and a 15-second pre-purge begins. If the switch is not proven within 2-1/2 minutes, the control goes into Watchguard-Pressure Switch mode for a 5-minute re-set period.

After the 15-second pre-purge period, the ignitor warms up for 20 seconds after which the gas valve opens for a 4-second trial for ignition. The ignitor energizes during the trial until flame is sensed. If ignition is not proved during the 4-second period, the control will try four more times with an inter purge and warm-up time between trials of 35 seconds. After a total of five trials for ignition (including the initial trial), the control goes into Watchguard-Flame Failure mode. After a 60-minute reset period, the control will begin the ignition sequence again.

Two Stage Operation / Thermostat Selection Jumper

The control can be utilized in two modes: SINGLE-STAGE thermostat or TWO-STAGE thermostat. The thermostat selection is made using the heat staging jumper (figure 4) and must be positioned for the particular application. The jumper is factory set in the NONE position for use with a two-stage thermostat. For use with a single-stage thermostat the heat staging jumper may be re-positioned to either a 10 minute delay or 15 minute delay before second stage is initiated.

While in the single-stage thermostat mode, (10 or 15 setting) the burners will always fire on first-stage heat. The combustion air inducer will operate on low speed and indoor blower will operate on low heat speed. After the delay period, the unit will switch to second stage heat. While in the two-stage thermostat mode (NONE setting) the burners will fire on first-stage heat. The combustion air inducer will operate on low speed and indoor blower will operate on low heat speed. The unit will switch to second-stage heat on call from the indoor thermostat. If there is a simultaneous call for first and second stage heat, the unit will fire an first stage heat and switch to second stage heat after 30 seconds of operation. See Sequence of Operation flow charts in the back of this manual for more detail.

TWO-STAGE, VARIABLE SPEED INTEGRATED CONTROL BOARD

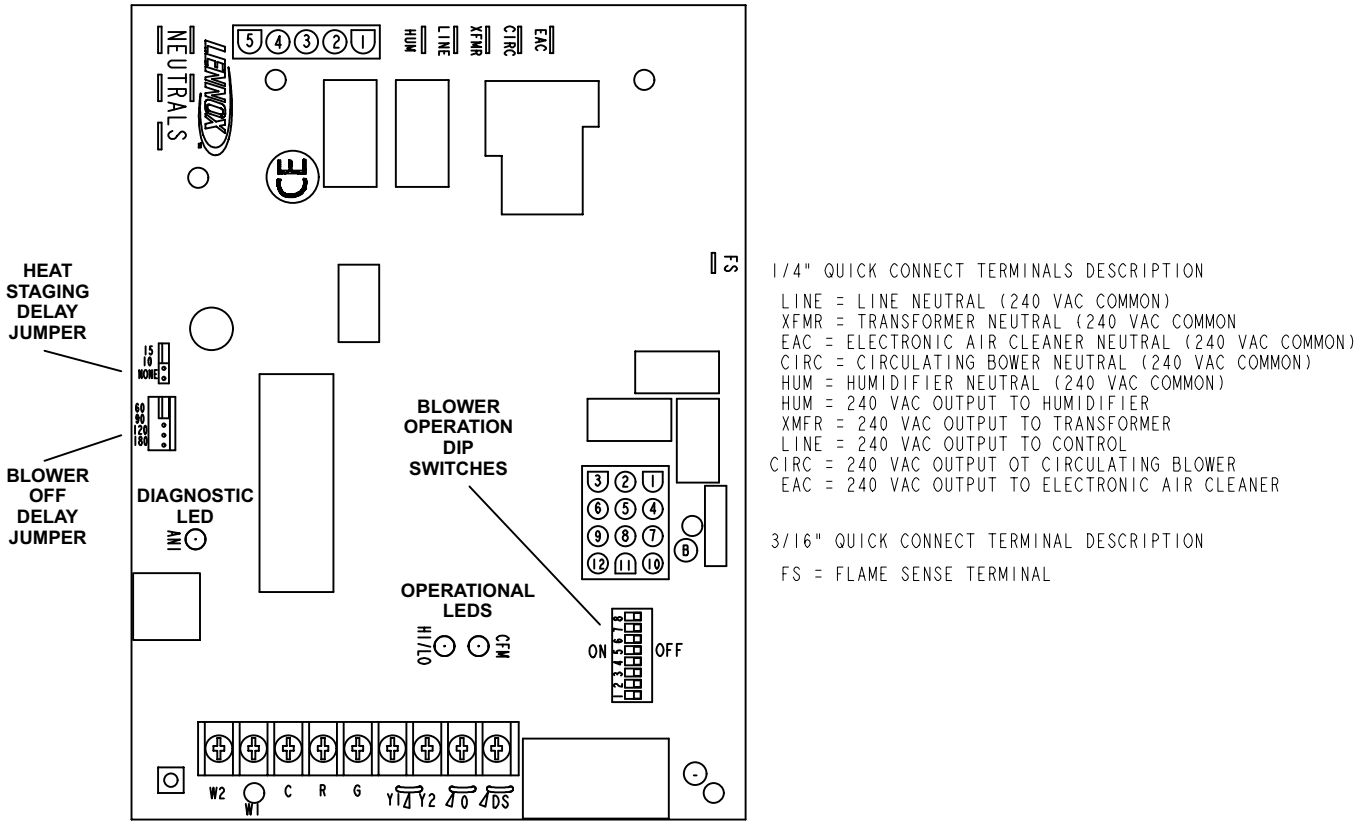

FIGURE 4

TABLE 1

5 Pin Terminal Designation	
PIN #	**Function**
1	Ignitor
2	Combustion Air Inducer High Speed
3	Combustion Air Inducer Low Speed
4	Combustion Air Inducer Neutral
5	Ignitor Neutral

TABLE 2

12Pin Terminal Designation	
PIN #	**Function**
1	Gas Valve High Fire
2	Second Stage Prove Switch
3	Rollout In
4	Ground
5	24V Hot
6	**Primary Limit In**
7	Gas Valve Low Stage
8	Gas Valve Common
9	24V Neutral
10	Ground
11	Rollout Switch Out
12	1st Stage Prove Switch

TABLE 3

SureLight Board 16 Pin Blower Control Terminals	
PIN #	**Function**
1	Ground
2	Low Heat Speed
3	Ground
4	“DELAY” Dip Switch Selection
5	“COOL” Dip Switch Selection
6	“Y1” Signal
7	“ADJUST” Dip Switch Selection
8	Ground
9	“0” From Thermostat
10	“DS” Output Signal
11	“HEAT” Dip Switch Selection
12	24 VAC
13	HIGH HEAT Speed
14	“Y2” Signal
15	“G”
16	CFM LED

TABLE 4
Control Board 101018-01

FLASH CODE (X + Y)	STATUS / ERROR DESCRIPTION
FLASH CODE DESCRIPTIONS	
Pulse	A 1/4 second flash followed by four seconds of off time.
Heartbeat	Constant 1/2 second bright and 1/2 second dim cycles.
X + Y	LED flashes X times at 2Hz, remains off for two seconds, flashes Y times at 2Hz, remains off for four seconds, then repeats.
Pulse	Power on - Standby.
Heartbeat	Normal operation - signaled when heating demand initiated at thermostat.
FLAME CODES	
1 + 2	Low flame current -- run mode.
1 + 3	Flame sensed out of sequence -- flame still present.
PRESSURE SWITCH CODES	
2 + 3	Low pressure switch failed open.
2 + 4	Low pressure switch failed closed.
2 + 5	High pressure switch failed open.
2 + 6	High pressure switch failed closed.
2 + 7	Low pressure switch opened during ignition trial or heating demand.
LIMIT CODE	
3 + 1	Limit switch open.
WATCHGUARD CODES	
4 + 1	Watchguard -- Exceeded maximum number of retries.
4 + 2	Watchguard -- Exceeded maximum number of retries or last retry was due to pressure switch opening.
4 + 3	Watchguard -- Exceeded maximum number of retries or last retry was due to flame failure.
4 + 5	Watchguard -- Limit remained open longer than three minutes.
4 + 6	Watchguard -- Flame sensed out of sequence; flame signal gone.
4 + 7	Ignitor circuit fault -- Failed ignitor or triggering circuitry.
4 + 8	Low line voltage (below 170 volts) or Low 24 VAC (below 18 volts)
HARD LOCKOUT CODES	
5 + 1	Hard lockout -- Rollout circuit open or previously opened.
5 + 2	Control failed self check, internal error (control will restart if error recovers).
5 + 3	No Earth ground (control will restart if error recovers).
5 + 4	Reversed line voltage polarity (control will restart if the error recovers).

TABLE 5
Control 101018-02

FLASH CODE (X + Y)	STATUS / ERROR DESCRIPTION
FLASH CODE DESCRIPTIONS	
Pulse	A 1/4 second flash followed by four seconds of off time.
Heartbeat	Constant 1/2 second bright and 1/2 second dim cycles.
X + Y	LED flashes X times at 2Hz, remains off for two seconds, flashes Y times at 2Hz, remains off for four seconds, then repeats.
Pulse	Power on - Standby.
Heartbeat	Normal operation - signaled when heating demand initiated at thermostat.
FLAME CODES	
1 + 2	Low flame current -- run mode.
1 + 3	Flame sensed out of sequence -- flame still present.
PRESSURE SWITCH CODES	
2 + 3	Low pressure switch failed open.
2 + 4	Low pressure switch failed closed.
2 + 5	High pressure switch failed open.
2 + 6	High pressure switch failed closed.
2 + 7	Low pressure switch opened during ignition trial or heating demand.
LIMIT CODE	
3 + 1	Limit switch open.
WATCHGUARD CODES	
4 + 1	Watchguard -- Exceeded maximum number of retries.
4 + 2	Watchguard -- Exceeded maximum number of retries or last retry was due to pressure switch opening.
4 + 3	Watchguard -- Exceeded maximum number of retries or last retry was due to flame failure.
4 + 5	Watchguard -- Limit remained open longer than three minutes.
4 + 6	Watchguard -- Flame sensed out of sequence; flame signal gone.
4 + 7	Ignitor circuit fault -- Failed ignitor or triggering circuitry.
4 + 8	Low line voltage (below 170 volts) or Low 24 VAC (below 18 volts)
HARD LOCKOUT CODES	
5 + 1	Hard lockout -- Rollout circuit open or previously opened.
5 + 3	No Earth ground (control will restart if error recovers).
5 + 4	Reversed line voltage polarity (control will restart if the error recovers).
5 + 5	Gas Valve Fault - Sensed open when should be closed or sensed closed when should be open
5 + 6	Program Memory Fault - Internal microprocessor memory fault (control will restart if error recovers)
5 + 7	Flame Sense Circuit Fault - Flame sense circuit or bad flame probe fault (control will restart if error recovers)
5 + 8	No Communication Fault - Loss of Communication between redundant microprocessors fault (control will restart if error recovers)
5 + 9	Bad Communication Packet Fault - Corrupted communication between redundant microprocessors Fault (control will restart if error recovers)
5 + 10	Redundant Variable Fault - Internal microprocessor memory retention fault (control will restart if error recovers)

Dip Switch Settings & Jumpers

Heat Staging Jumper

The heat staging jumper is factory-positioned in the NONE position for use with a two-stage thermostat. If a single-stage thermostat is to be used, the jumper must be repositioned.

When the G61MPVT unit is used with single-stage thermostat -- The heat staging jumper is used to determine the second stage on delay. The jumper may be positioned to provide either a 10-minute or a 15-minute delay before second-stage heat is initiated.

Blower-Off Delay Jumper -- The heating mode blower-on delay of 45 seconds is not adjustable. The heating mode blower-off delay (time that the blower operates after the heating demand has been satisfied) can be adjusted by moving blower-off delay jumper on the integrated control board. The unit is shipped from the factory with a blower-off delay of 90 seconds. The blower off delay affects comfort and is adjustable to satisfy individual applications. Adjust the blower off delay to achieve a supply air temperature between 32° and 43°C (90° and 110°F) at the exact moment that the blower is de-energized. Longer off delay settings provide lower supply air temperatures; shorter settings provide higher supply air temperatures. Settings of 60, 90, 120 and 180 seconds are available.

On-Board Jumper W914

On-board jumper W914, which connects terminals DS and R on the integrated control board, must be cut when the furnace is installed with a thermostat which features humidity control. Refer to table 18 for operation sequence in applications including G61MPVT, a thermostat which features humidity control and a single-speed outdoor unit.

On-Board Jumper W951

On-board jumper W951, which connects terminals R and O on the integrated control board, must be cut when the furnace is installed in applications which include a heat pump unit and a thermostat which features dual fuel use. If the jumper is left intact, terminal “O” will remain energized eliminating the HEAT MODE in the heat pump.

On-Board Jumper W915

On-board jumper W915, which connects terminals Y1 and Y2 on the integrated control board, must be cut if two-stage cooling will be used. If the jumper is not cut the outdoor unit will operate in first-stage cooling only.

Status LEDs (HI/LO, CFM, ANI)

The green HI/LO LED indicates circulating blower speed in response to the DS signal. The LED is lit during normal blower operation and is off during a dehumidification demand.

The green CFM LED indicates the blower air flow. Count the number of blinks between the two-second pauses to determine the airf low. Each blink represents approximately 50 L/s (100CFM).

The red ANI LED flashes diagnostic codes, which are detailed on Page 6.

Indoor Fan Operation DIP Switch Settings

Switches 1 and 2 -- Blower Speed Adjustment -- Switches 1 and 2 are used to select blower speed adjustment settings. The unit is shipped from the factory with the DIP switches positioned for NORMAL (no) adjustment. The DIP switches may be positioned to adjust the blower speed by +10% or -10% to better suit the application. The table below provides blower speed adjustments that will result from different switch settings. Refer to tables 10 through 17 for corresponding cfm values.

TABLE 6
Blower Speed Adjustment

Adjustment	Switch 1	Switch 2
+10% (approx.)	On	Off
NORMAL (Factory)	Off	Off
-10% (approx.)	Off	On

Switches 3 and 4 -- Cooling Mode Blower Speed -- Switches 3 and 4 are used to select cooling blower motor speed. The unit is shipped from the factory with the DIP switches positioned for high speed (4) indoor blower motor operation during the cooling mode. The table below provides the cooling mode blower speeds that will result from different switch settings. Refer to tables 10 through 17 for corresponding cfm values.

TABLE 7
Cooling Mode Blower Speeds

Speed	Switch 3	Switch 4
1 - Low	On	On
2 - Medium Low	Off	On
3 - Medium High	On	Off
4 - High (Factory)	Off	Off

Switches 5 and 6 -- Cooling Mode Blower Speed Ramping -- Switches 5 and 6 are used to select cooling mode blower speed ramping options. Blower speed ramping may be used to enhance dehumidification performance. The switches are factory set at option A which has the greatest effect on blower motor performance. Table 8 provides the cooling mode blower speed ramping options that will result from different switch settings. The cooling mode blower speed ramping options are detailed on the next page.

NOTE - The off portion of the selected ramp profile also applies during heat pump operation in dual fuel applications.

TABLE 8
Cooling Mode Blower Speed Ramping

Ramping Option	Switch 5	Switch 6
A (Factory)	Off	Off
B	On	Off
C	Off	On
D	On	On

Ramping Option A (Factory Selection)

- Motor runs at 50% for 30 seconds.
- Motor then runs at 82% for approximately 7-1/2 minutes.
- If demand has not been satisfied after 7-1/2 minutes, motor runs at 100% until demand is satisfied.
- Once demand is met, motor runs at 50% for 30 seconds then ramps down to stop.

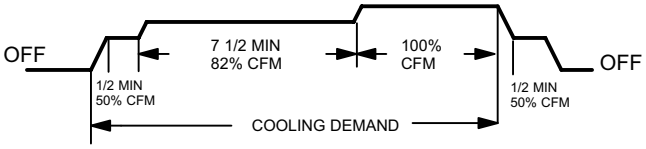

Ramping Option B

- Motor runs at 82% for approximately 7-1/2 minutes. If demand has not been satisfied after 7-1/2 minutes, motor runs at 100% until demand is satisfied.
- Once demand is met, motor ramps down to stop.

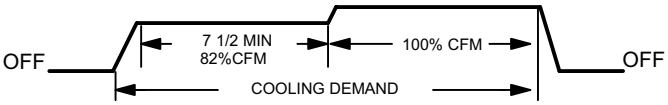

Ramping Option C

- Motor runs at 100% until demand is satisfied.
- Once demand is met, motor runs at 100% for 45 seconds then ramps down to stop.

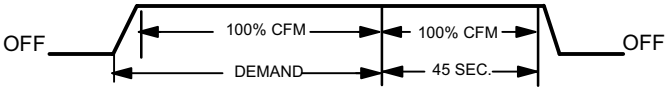

Ramping Option D

- Motor runs at 100% until demand is satisfied.
- Once demand is met, motor ramps down to stop.

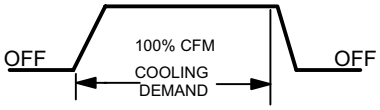

Switches 7 and 8 -- Heating Mode Blower Speed -- Switches 7 and 8 are used to select heating mode blower motor speed. The unit is shipped from the factory with the dip switches positioned for medium low (2) speed indoor blower motor operation during the heating mode. The table below provides the heating mode blower speeds that will result from different switch settings. Refer to tables 10 through 17 for corresponding L/s values.

TABLE 9
Heating Mode Blower Speeds

Speed	Switch 7	Switch 8
1 - Low	On	On
2 - Medium Low (Factory)	Off	On
3 - Medium High	On	Off
4 - High	Off	Off

TABLE 10
G61MPVT-36B-070 BLOWER MOTOR PERFORMANCE (LESS FILTER)
0.0” to 0.8” w.g. (0 through 200 Pa) External Static Pressure Range
Factory Settings: Heating Speed - 2; Cooling Speed - 4; Speed Adjust - NORM

“ADJUST” Switch Positions	Speed Switch Positions															
	Second Stage “HEAT” Speed								Second Stage “COOL” Speed							
	1		2		3		4		1		2		3		4	
	cfm	L/s	cfm	L/s	cfm	L/s	cfm	L/s	cfm	L/s	cfm	L/s	cfm	L/s	cfm	L/s
+	895	420	1025	485	1290	610	1340	630	1015	480	1190	560	1280	605	1395	660
NORM	820	385	940	445	1155	545	1210	570	930	440	1065	505	1155	545	1270	600
—	N/A	N/A	840	395	1020	480	1055	495	830	390	950	450	1010	475	1105	520
“ADJUST” Switch Positions	**First Stage “HEAT” Speed**								**First Stage “COOL” Speed**							
	1		2		3		4		1		2		3		4	
	cfm	L/s	cfm	L/s	cfm	L/s	cfm	L/s	cfm	L/s	cfm	L/s	cfm	L/s	cfm	L/s
+	820	385	930	440	1160	550	1210	570	730	345	815	385	865	410	935	440
NORM	760	360	865	410	1045	495	1090	515	680	320	755	355	795	375	855	405
—	N/A	N/A	775	365	930	440	965	455	625	295	695	330	730	345	775	365

N/A - First and second stage HEAT positions shown cannot be used on this model.

NOTES - The effect of static pressure is included in air volumes shown.
First stage HEAT is approximately **91%** of the same second stage HEAT speed position.
First stage COOL (two-stage air conditioning units only) is approximately 70**%** of the same second stage COOL speed position.
Continuous Fan Only speed is approximately **38%** of the same second stage COOL speed position - minimum 500 cfm (235 L/s).

TABLE 11
G61MPVT-60C-090 BLOWER MOTOR PERFORMANCE (LESS FILTER)
0.0” to 0.8” w.g. (0 through 200 Pa) External Static Pressure Range
Factory Settings: Heating Speed - 2; Cooling Speed - 4; Speed Adjust - NORM.
Return Air Options: Bottom; both sides; or bottom and one side.

“ADJUST” Switch Positions	Speed Switch Positions															
	Second Stage “HEAT” Speed								Second Stage “COOL” Speed							
	1		2		3		4		1		2		3		4	
	cfm	L/s	cfm	L/s	cfm	L/s	cfm	L/s	cfm	L/s	cfm	L/s	cfm	L/s	cfm	L/s
+	1500	710	1675	790	1880	885	2090	985	1605	760	1710	805	1925	910	2165	1020
NORM	1355	640	1545	730	1720	810	1900	895	1440	680	1560	735	1755	825	1960	925
—	1194	565	1365	645	1540	730	1695	800	1275	600	1380	650	1590	750	1755	830
“ADJUST” Switch Positions	**First Stage “HEAT” Speed**								**First Stage “COOL” Speed**							
	1		2		3		4		1		2		3		4	
	cfm	L/s	cfm	L/s	cfm	L/s	cfm	L/s	cfm	L/s	cfm	L/s	cfm	L/s	cfm	L/s
+	1360	640	1560	735	1730	815	1910	900	1105	520	1185	560	1355	640	1545	730
NORM	1220	575	1405	665	1585	750	1740	820	995	470	1080	510	1205	570	1345	635
—	1105	520	1235	585	1410	665	1570	740	890	420	960	455	1090	515	1215	575

NOTES - The effect of static pressure is included in air volumes shown.
First stage HEAT is approximately **91%** of the same second stage HEAT speed position.
First stage COOL (two-stage air conditioning units only) is approximately 70**%** of the same second stage COOL speed position.
Continuous Fan Only speed is approximately **38%** of the same second stage COOL speed position - minimum 500 cfm (235 L/s).

TABLE 12
G61MPVT-60C-090 BLOWER MOTOR PERFORMANCE (LESS FILTER)
0.0” to 0.8” w.g. (0 through 200 Pa) External Static Pressure Range
Factory Settings: Heating Speed - 2; Cooling Speed - 4; Speed Adjust - NORM.
Return Air Options: Single side return air - Bold volumes require field-fabricated transition to accommodate 20 x 25 x 1 in. (508 x 635 x 25 mm) cleanable air filter in order to maintain proper air velocity across the filter.

“ADJUST” Switch Positions	Speed Switch Positions															
	Second Stage “HEAT” Speed								Second Stage “COOL” Speed							
	1		2		3		4		1		2		3		4	
	cfm	L/s	cfm	L/s	cfm	L/s	cfm	L/s	cfm	L/s	cfm	L/s	cfm	L/s	cfm	L/s
+	1450	685	1640	775	1820	860	2055	970	1575	745	1690	795	1895	895	2135	1005
NORM	1320	625	1510	710	1700	800	1870	880	1405	665	1530	720	1735	820	1935	910
—	1165	550	1320	625	1500	705	1665	785	1250	590	1355	640	1560	735	1735	820
“ADJUST” Switch Positions	**First Stage “HEAT” Speed**								**First Stage “COOL” Speed**							
	1		2		3		4		1		2		3		4	
	cfm	L/s	cfm	L/s	cfm	L/s	cfm	L/s	cfm	L/s	cfm	L/s	cfm	L/s	cfm	L/s
+	1315	620	1510	715	1695	800	1875	885	1080	510	1160	545	1315	620	1490	705
NORM	1190	560	1365	645	1545	730	1715	810	985	465	1060	500	1185	560	1330	625
—	1075	510	1205	570	1370	645	1520	715	865	410	930	440	1065	500	1185	560

NOTES - The effect of static pressure is included in air volumes shown.
First stage HEAT is approximately **91%** of the same second stage HEAT speed position.
First stage COOL (two-stage air conditioning units only) is approximately 70**%** of the same second stage COOL speed position.
Continuous Fan Only speed is approximately **38%** of the same second stage COOL speed position - minimum 500 cfm (235 L/s).

TABLE 13
G61MPVT-60C-090 BLOWER MOTOR PERFORMANCE (LESS FILTER)
0.0” to 0.8” w.g. (0 through 200 Pa) External Static Pressure Range
Factory Settings: Heating Speed - 2; Cooling Speed - 4; Speed Adjust - NORM.
Return Air Options: Single side return with optional RAB return air base

“ADJUST” Switch Positions	Speed Switch Positions															
	Second Stage “HEAT” Speed								Second Stage “COOL” Speed							
	1		2		3		4		1		2		3		4	
	cfm	L/s	cfm	L/s	cfm	L/s	cfm	L/s	cfm	L/s	cfm	L/s	cfm	L/s	cfm	L/s
+	1440	680	1630	770	1810	855	2015	950	1525	720	1655	780	1860	880	2100	990
NORM	1300	615	1485	700	1655	780	1830	865	1385	655	1500	710	1695	800	1905	900
—	1155	545	1310	620	1480	700	1640	775	1240	585	1320	625	1510	710	1695	800
“ADJUST” Switch Positions	**First Stage “HEAT” Speed**								**First Stage “COOL” Speed**							
	1		2		3		4		1		2		3		4	
	cfm	L/s	cfm	L/s	cfm	L/s	cfm	L/s	cfm	L/s	cfm	L/s	cfm	L/s	cfm	L/s
+	1320	625	1490	700	1665	785	1840	870	1060	500	1135	535	1285	605	1455	685
NORM	1180	555	1345	635	1515	715	1680	795	960	455	1035	490	1165	550	1310	620
—	1055	500	1180	560	1340	630	1490	705	865	405	920	435	1050	495	1165	550

NOTES - The effect of static pressure is included in air volumes shown.
First stage HEAT is approximately **91%** of the same second stage HEAT speed position.
First stage COOL (two-stage air conditioning units only) is approximately 70**%** of the same second stage COOL speed position.
Continuous Fan Only speed is approximately **38%** of the same second stage COOL speed position - minimum 500 cfm (235 L/s).

TABLE 14
G61MPVT-60C-110 BLOWER MOTOR PERFORMANCE (LESS FILTER)
0.0” to 0.8” w.g. (0 through 200 Pa) External Static Pressure Range
Factory Settings: Heating Speed - 2; Cooling Speed - 4; Speed Adjust - NORM.
Return Air Options: Bottom; both sides; or bottom and one side.

“ADJUST” Switch Positions	Speed Switch Positions															
	Second Stage “HEAT” Speed								Second Stage “COOL” Speed							
	1		2		3		4		1		2		3		4	
	cfm	L/s	cfm	L/s	cfm	L/s	cfm	L/s	cfm	L/s	cfm	L/s	cfm	L/s	cfm	L/s
+	1505	710	1710	805	1915	905	2130	1005	1625	770	1745	825	1990	940	2210	1045
NORM	1370	645	1565	740	1765	835	1945	920	1465	690	1580	745	1790	845	1995	940
—	1205	570	1380	650	1565	740	1740	820	1290	610	1405	660	1605	760	1790	845
“ADJUST” Switch Positions	**First Stage “HEAT” Speed**								**First Stage “COOL” Speed**							
	1		2		3		4		1		2		3		4	
	cfm	L/s	cfm	L/s	cfm	L/s	cfm	L/s	cfm	L/s	cfm	L/s	cfm	L/s	cfm	L/s
+	1370	645	1570	740	1760	830	1945	920	945	445	1020	480	1160	545	1300	615
NORM	1235	585	1420	670	1600	755	1780	840	840	395	910	430	1055	500	1180	555
—	1105	525	1250	590	1420	670	1580	745	740	350	800	380	920	435	1045	495

NOTES - The effect of static pressure is included in air volumes shown.
First stage HEAT is approximately **91%** of the same second stage HEAT speed position.
First stage COOL (two-stage air conditioning units only) is approximately 70**%** of the same second stage COOL speed position.
Continuous Fan Only speed is approximately **38%** of the same second stage COOL speed position - minimum 500 cfm (235 L/s).

TABLE 15
G61MPVT-60C-110 BLOWER MOTOR PERFORMANCE (LESS FILTER)
0.0” to 0.8” w.g. (0 through 200 Pa) External Static Pressure Range
Factory Settings: Heating Speed - 2; Cooling Speed - 4; Speed Adjust - NORM.
Return Air Options: Single side return air - Bold volumes require field-fabricated transition to accommodate 20 x 25 x 1 in. (508 x 635 x 25 mm) cleanable air filter in order to maintain proper air velocity across the filter.

“ADJUST” Switch Positions	Speed Switch Positions															
	Second Stage “HEAT” Speed								Second Stage “COOL” Speed							
	1		2		3		4		1		2		3		4	
	cfm	L/s	cfm	L/s	cfm	L/s	cfm	L/s	cfm	L/s	cfm	L/s	cfm	L/s	cfm	L/s
+	1485	700	1675	790	1870	885	2080	980	1585	750	1700	800	1905	900	2135	1005
NORM	1350	637	1525	720	1725	815	1895	895	1435	680	1535	725	1740	820	1930	910
—	1175	555	1335	630	1505	710	1670	790	1280	605	1385	655	1570	740	1755	830
“ADJUST” Switch Positions	**First Stage “HEAT” Speed**								**First Stage “COOL” Speed**							
	1		2		3		4		1		2		3		4	
	cfm	L/s	cfm	L/s	cfm	L/s	cfm	L/s	cfm	L/s	cfm	L/s	cfm	L/s	cfm	L/s
+	1325	625	1505	710	1695	800	1870	885	935	440	1025	485	1155	545	1285	605
NORM	1195	565	1365	645	1550	730	1720	810	840	395	915	430	1050	495	1175	555
—	1080	510	1205	570	1365	645	1530	720	750	355	800	380	925	435	1050	495

NOTES - The effect of static pressure is included in air volumes shown.
First stage HEAT is approximately **91%** of the same second stage HEAT speed position.
First stage COOL (two-stage air conditioning units only) is approximately 70**%** of the same second stage COOL speed position.
Continuous Fan Only speed is approximately **38%** of the same second stage COOL speed position - minimum 500 cfm (235 L/s).

TABLE 16
G61MPVT-60C-110 BLOWER MOTOR PERFORMANCE (LESS FILTER)
0.0” to 0.8” w.g. (0 through 200 Pa) External Static Pressure Range
Factory Settings: Heating Speed - 2; Cooling Speed - 4; Speed Adjust - NORM.
Return Air Options: Single side return air with optional RAB return base. -
20 x 25 x 1 in. (508 x 635 x 25 mm) cleanable air filter in order to maintain proper air velocity across the filter.

“ADJUST” Switch Positions	Speed Switch Positions															
	Second Stage “HEAT” Speed								Second Stage “COOL” Speed							
	1		2		3		4		1		2		3		4	
	cfm	L/s	cfm	L/s	cfm	L/s	cfm	L/s	cfm	L/s	cfm	L/s	cfm	L/s	cfm	L/s
+	1475	695	1670	790	1865	880	2070	980	1555	735	1685	795	1895	895	2130	1005
NORM	1345	635	1500	710	1695	800	1865	880	1415	670	1540	725	1735	820	1930	910
—	1180	555	1345	635	1510	710	1685	795	1245	590	1350	635	1545	730	1725	815
“ADJUST” Switch Positions	**First Stage “HEAT” Speed**								**First Stage “COOL” Speed**							
	1		2		3		4		1		2		3		4	
	cfm	L/s	cfm	L/s	cfm	L/s	cfm	L/s	cfm	L/s	cfm	L/s	cfm	L/s	cfm	L/s
+	1330	625	1510	715	1695	800	1875	885	1085	510	1155	545	1310	620	1475	695
NORM	1195	565	1375	650	1550	730	1725	815	955	450	1050	495	1185	560	1335	630
—	1080	510	1210	570	1370	645	1520	715	850	400	920	435	1070	505	1195	565

NOTES - The effect of static pressure is included in air volumes shown.
First stage HEAT is approximately **91%** of the same second stage HEAT speed position.
First stage COOL (two-stage air conditioning units only) is approximately 70**%** of the same second stage COOL speed position.
Continuous Fan Only speed is approximately **38%** of the same second stage COOL speed position - minimum 500 cfm (235 L/s).

TABLE 17
G61MPVT-60D-135 BLOWER MOTOR PERFORMANCE (LESS FILTER)
0.0” to 0.8” w.g. (0 through 200 Pa) External Static Pressure Range
Factory Settings: Heating Speed - 2; Cooling Speed - 4; Speed Adjust - NORM.
Return Air Options: Bottom; both sides; or bottom and one side.

“ADJUST” Switch Positions	Speed Switch Positions															
	Second Stage “HEAT” Speed								Second Stage “COOL” Speed							
	1		2		3		4		1		2		3		4	
	cfm	L/s	cfm	L/s	cfm	L/s	cfm	L/s	cfm	L/s	cfm	L/s	cfm	L/s	cfm	L/s
+	1505	710	1705	805	1900	900	2110	995	1615	760	1730	815	1945	920	2190	1035
NORM	1365	645	1550	730	1740	820	1920	905	1455	685	1580	745	1780	840	1985	935
—	1225	580	1380	650	1545	730	1720	810	1305	615	1400	660	1600	755	1780	840
“ADJUST” Switch Positions	**First Stage “HEAT” Speed**								**First Stage “COOL” Speed**							
	1		2		3		4		1		2		3		4	
	cfm	L/s	cfm	L/s	cfm	L/s	cfm	L/s	cfm	L/s	cfm	L/s	cfm	L/s	cfm	L/s
+	1385	655	1570	740	1760	830	1930	910	1135	535	1205	570	1365	645	1540	725
NORM	1250	590	1425	670	1595	755	1775	835	1025	485	1105	520	1235	580	1390	655
—	1135	535	1265	595	1430	675	1585	750	915	430	985	465	1115	525	1235	585

NOTES - The effect of static pressure is included in air volumes shown.
First stage HEAT is approximately **91%** of the same second stage HEAT speed position.
First stage COOL (two-stage air conditioning units only) is approximately 70**%** of the same second stage COOL speed position.
Continuous Fan Only speed is approximately **38%** of the same second stage COOL speed position - minimum 500 cfm (235 L/s).

TABLE 18
G61MPVT, SignatureStat™ Thermostat and Single Stage Outdoor Unit

OPERATING SEQUENCE		SYSTEM DEMAND								SYSTEM RESPONSE		
System Condition	Step	Thermostat Demand						Relative Humidity		Compres-sor	Blower CFM (COOL)	Comments
		Y1		O	G	W 1		Status	D			
NO CALL FOR DEHUMIDIFICATION												
Normal Operation	1	On		On	On			Acceptable	24 VAC	High	100%	Compressor and indoor blower follow thermostat demand
BASIC MODE (only active on a Y1 thermostat demand)												
Normal Operation	1	On		On	On			Acceptable	24 VAC	High	100%	SignatureStat energizes Y1 and de-energizes D on a call for de-humidification
Dehumidification Call	2	On		On	On			Demand	0 VAC	High	70%*	
PRECISION MODE (operates independent of a Y1 thermostat demand)												
Normal Operation	1	On		On	On			Acceptable	24 VAC	High	100%	Dehumidification mode begins when humidity is greater than set point
Dehumidification call	2	On		On	On			Demand	0 VAC	High	70%*	
Dehumidification call ONLY	1	On		On	On			Demand	0 VAC	High	70%*	SignatureStat will try to maintain room humidity setpoint by allowing the room space to maintain a cooler room thermostat setpoint**
	Jumpers at indoor unit with a single stage outdoor unit With Condensing unit - Cut W914 (R to DS) on SureLight board With Heat Pump - Cut W914 (R to DS) & W951 (R to O) on SureLight board											

Dave Lennox SignatureStat to use for this application - 51M26 1 heat / 1 cool or 51M28 - 2 heat / 2 cool for heat pumps
**Dehumidification blower speed is 70% of COOL speed.*
***In Precision mode, SigstatureStat will maintain room temperature up to 1.2°C cooler than room setting.*

B-Blower Compartment Figure 5

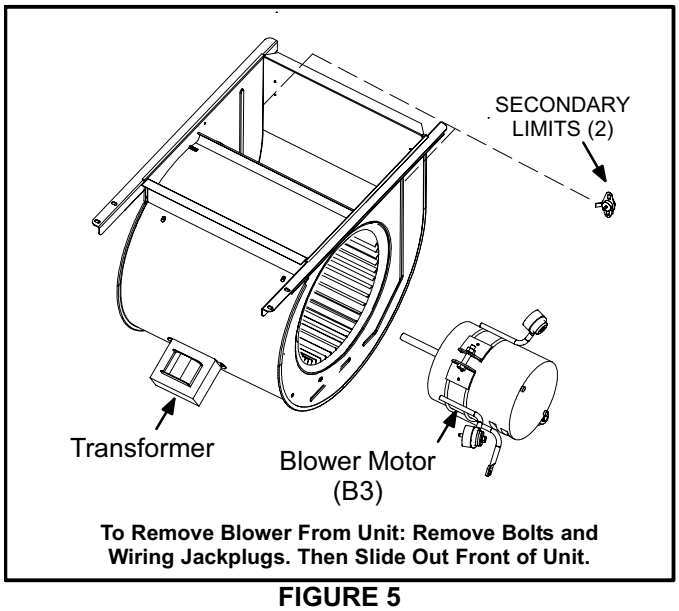

FIGURE 5

Secondary Limt (S21)

The secondary limits (S21) on G61MPVT units are located in the blower compartment on the back side of the blower housing. See figure 5. All G61MPVT units are equipped with two secondary limts. When excess heat is sensed in the blower compartment, the limit will open. If the limit is open, the furnace control energizes the supply air blower and closes the gas valve. The limit automatically resets when unit temperature returns to normal. The switch is factory set to open at 51°C and cannot be adjusted.

Blower Motor (B3)

G61MPVT units use a three-phase, electronically controlled D.C. brushless motor (controller converts single phase a.c. to three phase D.C.), with a permanent-magnet-type rotor (figure 6). Because this motor has a permanent magnet rotor it does not need brushes like conventional D.C. motors.

Internal components are shown in figure 7. The stator windings are split into three poles which are electrically connected to the controller. This arrangement allows motor windings to turn on and off in sequence by the controller.

A solid-state controller is permanently attached to the motor. The controller is primarily an A.C. to D.C. converter. Converted D.C. power is used to drive the motor. The controller contains a microprocessor which monitors varying conditions inside the motor (such as motor workload).

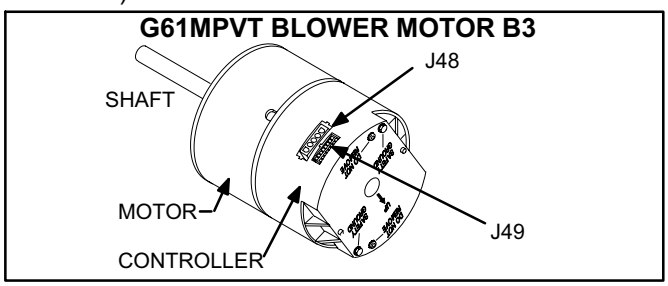

FIGURE 6

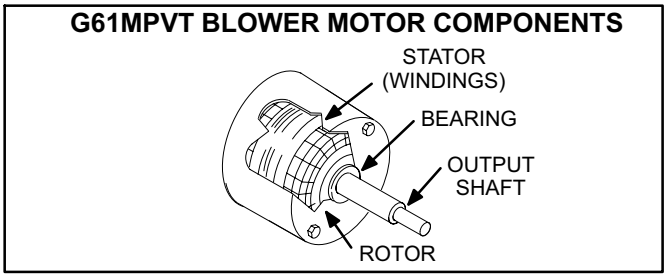

FIGURE 7

The controller uses sensing devices to sense what position the rotor is in at any given time. By sensing the position of the rotor and then switching the motor windings on and off in sequence, the rotor shaft turns the blower.

All G61MPVT blower motors use single phase power. An external run capacitor is not used. The motor uses permanently lubricated ball-type bearings.

Internal Operation

Each time the controller switches a stator winding (figure 7) on and off, it is called a “pulse.” The length of time each pulse stays on is called the “pulse width.” By varying the pulse width (figure 9), the controller varies motor speed (called “pulse-width modulation”). This allows for precise control of motor speed and allows the motor to compensate for varying load conditions as sensed by the controller. In this case, the controller monitors the static workload on the motor and varies motor rpm in order to maintain constant airflow (cfm).

The motor controller is driven by the Two-stage Variable Speed Integrated control board. The board receives its demand (PWM signal or fixed 24 VAC or VDC signal) from optional controls such as the Harmony zone control system, SignatureStat™ or a conventional thermostat.

Motor rpm is continually adjusted internally to maintain constant static pressure against the blower wheel. The controller monitors the static work load on the motor and motor amp-draw to determine the amount of rpm adjustment. Blower rpm may be adjusted any amount in order to maintain a constant cfm as shown in Blower Ratings Tables. The cfm remains relatively stable over a broad range of static pressure. Since the blower constantly adjusts rpm to maintain a specified cfm, motor rpm is not rated. Hence, the terms “cool speed” , “heat speed ” or “speed tap” in this manual, on the unit wiring diagram and on blower B3, refer to blower cfm regardless of motor rpm.

When Harmony is used, speed taps are overridden and a PWM signal generated by the Harmony controller continuously varies motor speed based upon zone demands.

Initial Power Up

When line voltage is applied to B3, there will be a large inrush of power lasting less than 1/4 second. This inrush charges a bank of DC filter capacitors inside the controller. If the disconnect switch is bounced when the disconnect is closed, the disconnect contacts may become welded. Try not to bounce the disconnect switch when applying power to the unit.

Motor Start-Up

When B3 begins start-up, the motor gently vibrates back and forth for a moment. This is normal. During this time the electronic controller is determining the exact position of the rotor. Once the motor begins turning, the controller slowly eases the motor up to speed (this is called “soft-start”). The motor may take as long as 10-15 seconds to reach full speed. If the motor does not reach 200rpm within 13 seconds, the motor shuts down. Then the motor will immediately attempt a restart. The shutdown feature provides protection in case of a frozen bearing or blocked blower wheel. The motor may attempt to start eight times. If the motor does not start after the eighth try, the controller locks out. Reset controller by momentarily turning off power to unit.

The DC filter capacitors inside the controller are connected electrically to the speed tap wires. The capacitors take approximately 5 minutes to discharge when the disconnect is opened. For this reason it is necessary to wait at least 5 minutes after turning off power to the unit before attempting to change speed taps.

⚠ DANGER

Disconnect power from unit and wait at least five minutes to allow capacitors to discharge before attempting to adjust motor speed tap settings. Failure to wait may cause personal injury or death.

External Operation (Speed Tap Priority)

Figure 8 shows the two quick-connect jacks (J48 and J49) which connect the motor to the G61MPVT. Jack J48 is the power plug and jack J49 connects the unit controls to the motor.

Line voltage must be applied to J48 pin 5 in order for the motor to operate. When using 230VAC pins 1 and 2 must not be jumpered. When control voltage is applied to J49 pin 3 and 15, the motor is energized on the continuous fan mode.

When voltage is applied to J49 pin 2 in addition to pin 3 and 15 (first stage heating), the blower is energized on the low speed heating tap. When voltage is applied to J49 pin 13 in addition to pin 3 and 15 (second stage heating), the blower is energized on the high speed heating tap. The motor assigns priority to J49 pin 2 so that if a call for cooling and a call for heating are concurrent, heating call overrides and the blower operates on high speed heating tap.

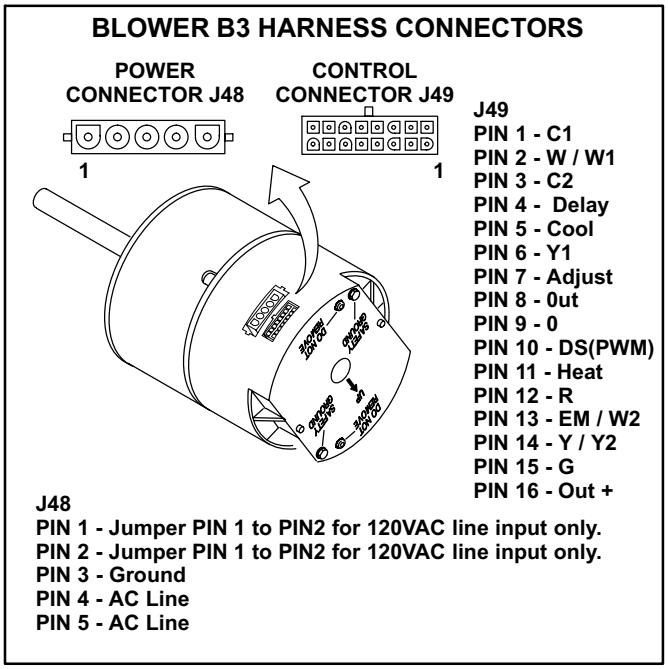

FIGURE 8

Precautions

If the G61MPVT or its electronically controlled blower motor is improperly or inadequately grounded, it may cause television interference (commonly known as RFI or radio frequency interference).

This interference is caused by internal switching frequencies of the motor controller. TV interference may show up as small specks or lines which randomly appear on the TV screen accompanied by pops or clicks in the sound. Before attempting any service, make sure the indoor unit is causing the interference. To check, disconnect power to indoor unit then check TV for continued signs of interference.

TV interference may be stopped by making sure the motor is solidly grounded to the cabinet (metal to metal) and by making sure the cabinet is solidly grounded. If TV interference persists, make sure the television (and all affected RF appliances) are moved away from the G61MPVT. Also make sure affected appliances are connected to a separate electrical circuit.

MOTOR SPEED CONTROL WITH D.C. PULSE-WIDTH MODULATION

Motor speed is determined by the size of the electrical pulse sent to the motor windings. The longer the pulse, the faster the motor.

OUTPUT FROM CONTROLLER TO MOTOR WINDINGS	
WINDINGS TURNED OFF	**WINDINGS TURNED ON**
	ON PULSE **OFF PULSE**

The frequency of the pulses to the windings is 20KHz.
DO NOT ATTEMPT TO MEASURE THESE VOLTAGES.

LOW SPEED HEAT/COOL (output from controller to motor windings)

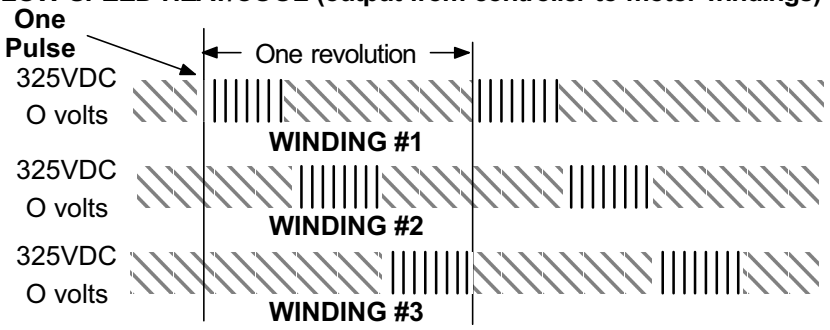

HIGH SPEED HEAT (output from controller to motor windings)

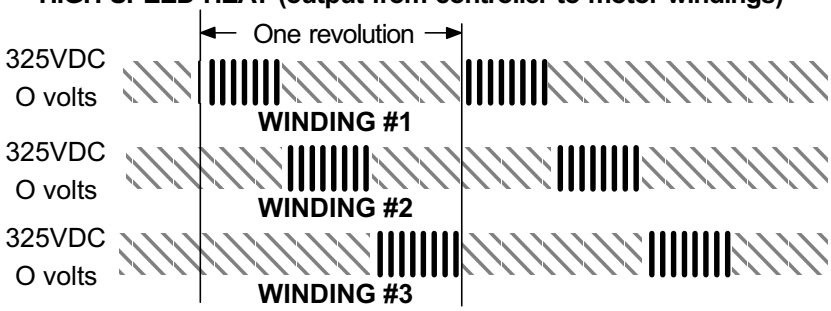

HIGH SPEED COOL (output from controller to motor windings)

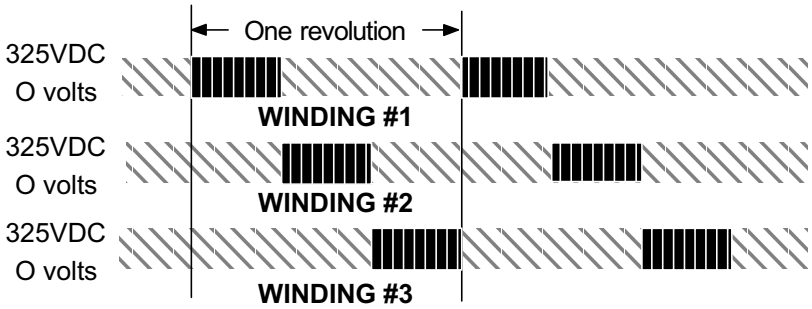

FIGURE 9

C-Heating Components

5. Flame Sensor

A flame sensor is located on the left side of the burner support. See figure 10. The sensor is mounted through the bottom of the burner box and the tip protrudes into the flame envelope of the left-most burner. The sensor can be removed for service without removing any part of the burners. During operation, flame is sensed by current passed through the flame and sensing electrode. The control allows the gas valve to remain open as long as flame signal is sensed.

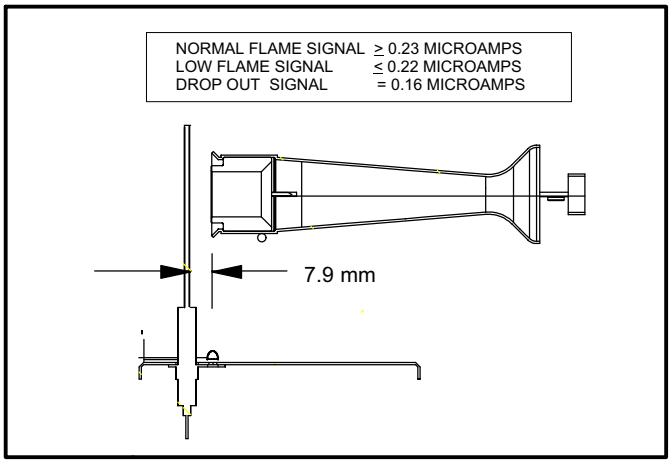

FIGURE 10

6. Ignitor

The mini-nitride ignitor is made from a propietory material. Ignitor longevity is enhanced by controlling the voltage to the ignitor. To check ignitor reliabiltiy measure its resistance. A value of 400 to 750 ohms indicates a good ignitor. See figure 11 for ignitor location.

NOTE - The G61MPVT furnace contains electronic components that are polarity sensitive. Make sure that the furnace is wired correctly and is properly grounded.

7. Burners (Figure 11)

All units use inshot burners. Burners are factory set and do not require adjustment. The manifold brackets are slotted so burners can be removed as an assembly for service. Burner maintenance and service is detailed in the MAINTENANCE section of this manual. Each burner uses an orifice which is precisely matched to the burner input and is threaded into the burner manifold.

A flame retention ring in the end of each burner maintains correct flame length and shape and keeps the flame from lifting off the burner head. In addition, the burner entrance to each clamshell is fitted with a corbel cup (orifice) used to direct the flow of combustion products.

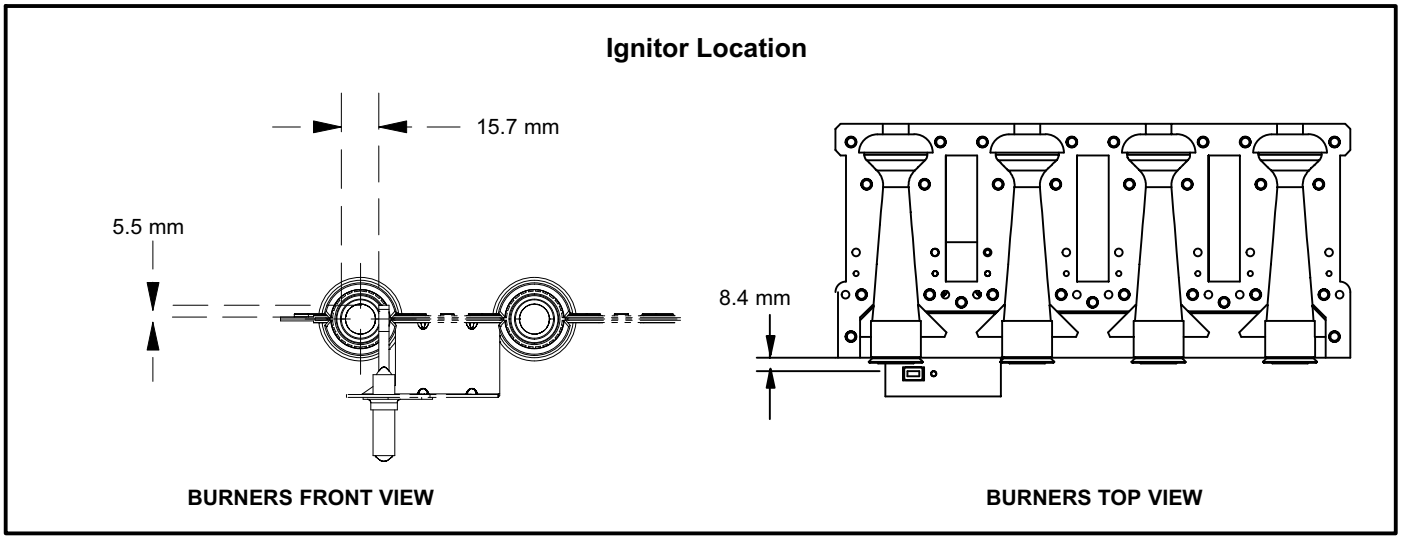

FIGURE 11

8. Clamshell Heat Exchanger

G61MPVT units use an aluminized steel primary and stainless steel secondary heat exchanger assembly. Heat is transferred to the air stream from all surfaces of the heat exchanger. The shape of the heat exchanger ensures maximum efficiency.

The combustion air inducer pulls fresh air through the burner box. This air is mixed with gas in the burner venturi and at the corbel orifices. The gas / air mixture is then burned at the entrance of each clamshell. Combustion gases are then pulled through the primary and secondary heat exchangers and exhausted out the exhaust vent pipe.

9. Flame Rollout Switches (S47)

Flame rollout switch S47 is a high temperature limit located on each side of the burner box. Each furnace is equipped with two identical switches. The limit is a N.C. SPST manual-reset limit connected in series with the primary limit S10. When S47 senses rollout, the circuit breaks and the ignition control immediately stops ignition and closes the gas valve.

If unit is running and flame rollout is detected, the gas valve will close and ignition control will be disabled. Rollout can be caused by a blocked heat exchanger, flue or lack of combustion air. The switch is factory set to trip (open) at 121°C and cannot be adjusted. The switch can be manually reset. To manually reset a tripped switch, push the reset button located on the control.

10. Primary Limit Control (S10)

Figure 12 shows the primary limit (S10) used on G61MPVT units located in the heating vestibule panel. S10 is provided with a shield on some models (figure 12) and must not be removed. Note orientation of shield and limit if limit is replaced. When excess heat is sensed in the heat exchanger, the limit will open. Once the limit opens, the furnace control energizes the supply air blower and de-energizes the gas valve. The limit automatically resets when unit temperature returns to normal. The switch is factory set and cannot be adjusted. Settings vary between models. See Lennox Repair Parts for replacement.

11. Backup Secondary Limit Control (S113) (G61MPVT-090, 110, 135 only)

Backup secondary limit control S113 is a N.C. auto-reset switch located on the combustion air inducer. S113 acts as a backup to primary limit S10 in the event of an indoor blower failure. S113 contacts open when temperature on the CAI reaches 61C°.

12. Gas Valve (GV1)

The G61MPVT uses a two-stage gas valve manufactured by Honeywell (figure 30). The valve is internally redundant to assure safety shut-off. If the gas valve must be replaced, the same type valve must be used.

24VAC terminals and gas control knob or switch are located on the valve. All terminals on the gas valve are connected to wires from the electronic ignition control. 24V applied to the terminals energizes the valve.

Inlet and outlet pressure taps are located on the valve. A regulator adjustment screw is located on the valve.

LPG change over kit s are available from Lennox. Kits include burner orifices and a gas valve regulator conversion kit.

The burner box is sealed and operates under a negative pressure. A pressure hose is connected from the burner box to the gas valve. The gas valve senses the pressure in the burner box and changes gas valve outlet (manifold) pressure based on changes in the burner box pressure. The intent is to compensate for different vent configurations which can greatly affect the rate of the unit.

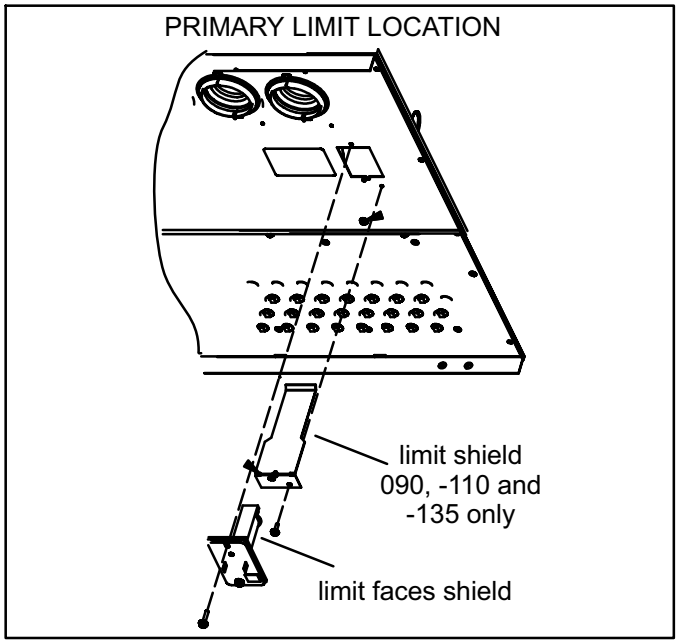

FIGURE 12

13. Combustion Air Inducer Prove Switch (S18)

All G61MPVT units are equipped with *two* dual prove switch "assemblies" consisting of two switches. See figure 13. The switches are connected to the cold end header box by means of a flexible hose that monitors negative air pressure in the cold end header box.

The switches are a single-pole single-throw proving switch electrically connected to the furnace control. The purpose of the switch is to prevent burner operation if the combustion air inducer is not operating or if the flue becomes obstructed.

On heat demand (first or second stage) the switch senses that the combustion air inducer is operating. It closes a circuit to the furnace control when pressure inside the cold end header box decreases to a certain set point. Set points vary depending on unit size. See tables 19 and 20.The pressure sensed by the switch is negative. If the air intake vent pipe or outlet vent pipe becomes obstructed during

operation, the switch senses a change of negative pressure and opens the circuit to the furnace control and gas valve. A bleed port on the switch allows relatively dry air in the vestibule to purge switch tubing, to prevent condensate build up.

TABLE 19
0 to 610m

G61MPVT Unit	Set Point Second Stage Pa	Set Point First Stage Pa
-070	250	150
-090	262	175
-110	212	125
-135	150	87

TABLE 20
611 to 1372m

G61MPVT Unit	Set Point Second Stage Pa	Set Point First Stage Pa
-070	212	125
-090	212	125
-110	187	125
-135	not allowed	not allowed

The switch is factory set and is not field adjustable. If switch is closed or jumpered, the control will not initiate ignition at start up.

⚠ WARNING

The prove switch is a safety shut-down control in the furnace and must not be jumpered for any reason.

DUAL COMBUSTION AIR PROVE SWITCH

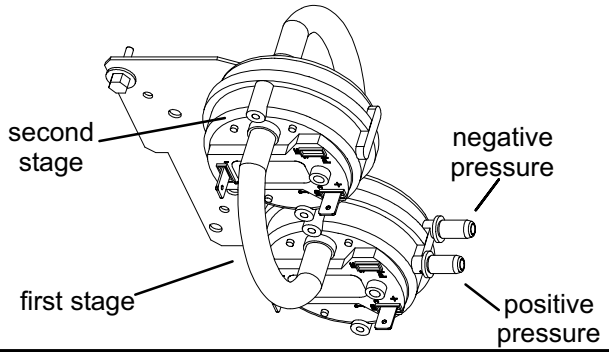

FIGURE 13

To troubleshoot the prove switches, temporarily jumper them. The unit will not fire with the switches jumpered. Therefore, the prove switches must be bypassed after the combustion air inducer is activated. This will determine if the prove switches and furnace are operating properly. However, this may not indicate if the sealed combustion system is operating properly.

Checks of pressure differential can aid in troubleshooting. When measuring the pressure differential, readings should be taken at the prove switch. Lack of differential usually indicates problems in the intake or exhaust piping, but may indicate problems in the heat exchanger, condensing coil, header boxes, combustion inducer or other components.

Measuring pressure differential Figure 14

The differential pressure is the difference in pressure measured across the cold end header box orifice.

1 - Remove thermostat demand and allow unit to cycle off.

2 - Install a tee in the negative (-) line and a tee in the positive (+) line running from one of the prove switches to the cold end header box.

3 - Install a manometer with hose from the negative (-) side of the manometer to the tee installed in the negative (-) line and with hose from the positive (+) side of the manometer to the tee in the positive (+) line.

NOTE - Both sides of the cold end header box are negative. However the (+) port reads less negative pressure than the (-) port.

CAI & COLD END HEADER BOX ASSEMBLY

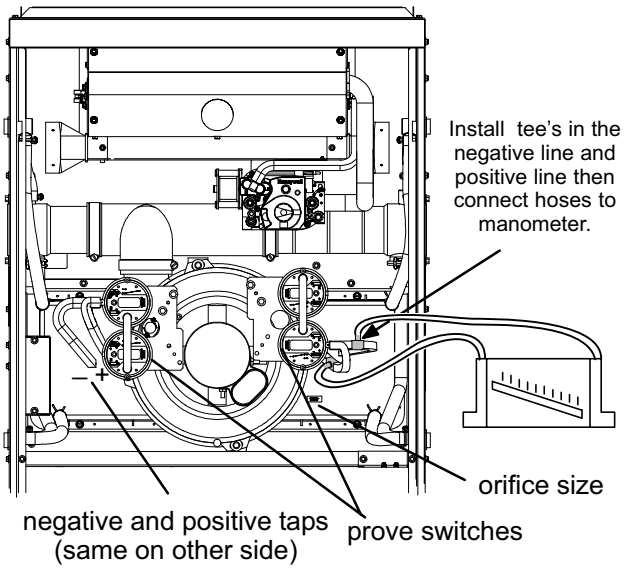

FIGURE 14

4 - Operate unit and observe manometer reading. *Readings will change as heat exchanger warms.*
a. Take one reading immediately after start-up.
b. Take a second reading after unit has reached steady state (approximately 5 minutes). This will be the pressure differential.

The pressure differential should be greater than those listed in table 19.

5 - Remove thermostat demand and allow to cycle off.

6 - Remove manometer and tee's. Reinstall combustion air sensing hoses to the prove switch.

7 - Repeat steps 1 through 6 for the other prove switch.

14. Combustion Air Inducer (B6)

All G61MPVT units use a two-speed combustion air inducer (CAI) to move air through the burners and heat exchanger during heating operation. The inducer uses a PSC 230VAC motor. The motor operates during all heating operation and is controlled by the ignition control A92. Inducer operates continuously while there is a call for heat. The burner ignition control will not proceed with the ignition sequence until combustion air inducer operation is sensed by the proving switches.

The CAI is installed on the cold end header box. The cold end header box is a single piece made of hard plastic. The box has an internal channel where the combustion air inducer creates negative pressure at unit start up. The channel contains an orifice used to regulate flow created by the CAI. The box has pressure taps for the CAI prove switch hoses.

The prove switches measure the pressures across the CAI orifice or difference in the channel and the box. See table 21, or a window is provided on the bottom right hand side of the box to indicate orifice size. See figure 14. **If replacement is necessary the gaskets used to seal the box to the vestbule panel and the CAI to the box, must also be replaced.**

TABLE 21

G61MPV Unit	C.A.I. Orifice Size mm
-070	23.8
-090	27
-110	33.3
-135	42.8”

II-PLACEMENT AND INSTALLATION

A-Vent Piping Guidlines

G61MPVT furnaces, with the exception of the G61MPVT-60D-135, can be installed as either a Non-Direct Vent or a Direct Vent gas central furnace. The G61MPVT-60D-135 can only be installed as a Direct Vent (two pipe) gas central furnace.

NOTE - In Non-Direct Vent installations, combustion air is taken from indoors and flue gases are discharged outdoors. In Direct Vent installations, combustion air is taken from outdoors and flue gases are discharged outdoors.

Intake and exhaust pipe sizing in Direct Vent applications and exhaust pipe sizing in Non-Direct Vent applications -- Size pipe according to tables 22 and 23. Table 22 lists the *minimum* equivalent vent pipe lengths permitted. Table 23 lists the *maximum* equivalent pipe lengths permitted.

Maximum vent length is defined as:

Total length (linear meters) of pipe,
Plus Equivalent length (meters) of fittings,
Plus Equivalent length (meters) of termination.
NOTE - Include ALL pipe and ALL fittings, both in doors and outdoors.

Regardless of the diameter of pipe used, the standard roof and wall terminations described in section *Exhaust Piping Terminations* should be used. Exhaust vent termination pipe is sized to optimize the velocity of the exhaust gas as it exits the termination. Refer to table 24.

NOTE - The exhaust pipe should be offset a minimum of 305mm (12 inches) to avoid the possibility of water droplets being released from the exhaust termination. The minimum exhaust vent length is 4.5m (15 feet). Shorter exhaust vent lengths may result in the discharge of water droplets from the exhaust termination, in spite of the 305mm (12-inch) vertical offset.

Each 90° elbow (including those provided with the furnace) of any diameter is equivalent to 1.5m (5 feet) of vent pipe of the same diameter. Two 45° elbows are equivalent to one 90° elbow of the same diameter. One 45° elbow is equal to .76m (2.5 feet) of vent pipe of the same diameter.

In some applications which permit the use of several different sizes of vent pipe, a combination vent pipe may be used. Contact Lennox for assistance in sizing vent pipe in these applications.

NOTE - The flue collar on all models is sized to accommodate 50mm Schedule 40 / Class 12 / Class E pressure pipe. When vent pipe which is larger than 50mm must be used in an upflow application, a 50mm elbow must be applied at the flue collar in order to properly transition to the larger diameter flue pipe. This elbow must be added to the elbow count used to determine acceptable vent lengths. Assign an equivalent meter value to this elbow according to the larger size pipe being used. Contact Lennox for more information concerning sizing of vent systems which include multiple pipe sizes.

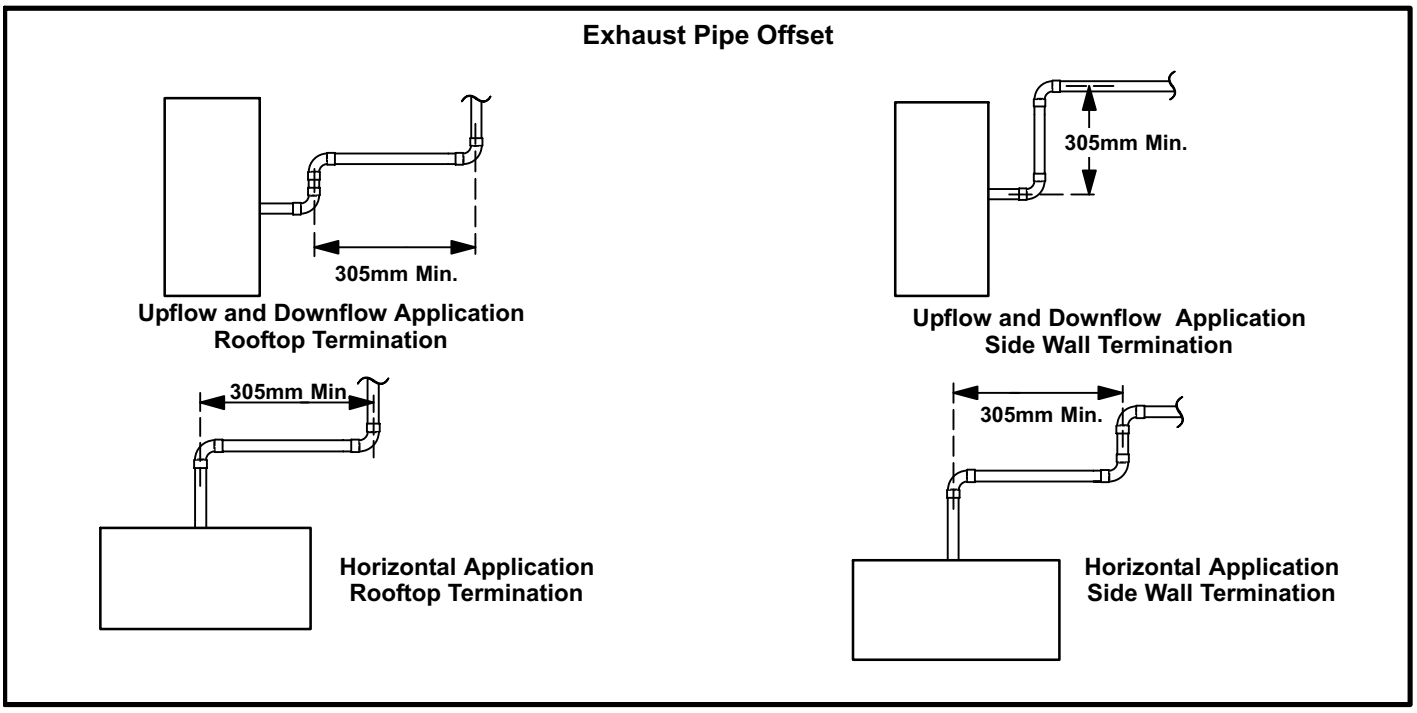

FIGURE 15

Use the following steps to correctly size vent pipe diameter.

1 - Determine the vent termination and its corresponding equivalent meter value per table 23.

2 - Determine the number of 90° elbows required for both indoor and outdoor use. Calculate the corresponding equivalent meters of vent pipe.

3 - Determine the number of 45° elbows required for both indoor and outdoor use. Calculate the corresponding equivalent meters of vent pipe.

4 - Determine the length of straight pipe required.

5 - Add the total equivalent meters calculated in steps 1 through 4 and compare that length to the maximum values given in table 23 for the proposed vent pipe diameter. If the total equivalent length required exceeds the maximum equivalent length listed in the appropriate table, evaluate the next larger size pipe.

TABLE 22
MINIMUM VENT PIPE LENGTHS

G61MPVT MODEL	MIN. EQUIV. VENT LENGTH	EXAMPLE
070, 090	4.5m*	1.5m plus 2 elbows of 50mm or 80mm diameter pipe
110**		1.5m plus 2 elbows of 80mm diameter pipe
135***		1.5m plus 2 elbows of 80mm diameter pipe

**Any approved termination may be added to the minimum equivalent length listed.*

***G61MPVT-60C-110 must have 90° street ell (supplied) installed directly into unit flue collar.*

****G61MPVT-60D-135 must have 80mm to 50mm (3" to 2") reducing ell (supplied) installed directly into unit flue collar.*

TABLE 23
MAXIMUM VENT PIPE LENGTHS

ALTITUDE	G61MPVT MODEL	MAXIMUM EQUIVALENT VENT LENGTH METERS		
		50mm dia.	80mm dia.	100mm dia.
0 - 610m	070	12.2	16.1	44
	090	4.5	12.2	34.5
	110*	n/a	12.2	30
	135*	n/a	7.6	20
611 -1372m	070	7.6	10	27.5
	090	n/a	7.6	21.5
	110*	n/a	7.6	18.7
	135*	n/a	n/a	n/a

n/a -- Not allowed.

**G61MPVT-60C-110 and G61MPVT-60D-135 must have 90° street ell (supplied) installed directly into unit flue colla and 50mm to 80mm reducer (supplied) must be installed on the 50mm ell.*

NOTE - All 90° elbows used in configuration of vent, must be sweep elbows.

⚠ IMPORTANT

The G61MPVT unit is not suitable for use at elevations over 610m.

B-Joint Cementing Procedure

All cementing of joints should be done according to the relevant local authority.

⚠ WARNING

DANGER OF EXPLOSION!

Fumes from PVC glue may ignite during system check. Allow fumes to dissipate for at least 5 minutes before placing unit into operation.

1 - Measure and cut vent pipe to desired length.

2 - Debur and chamfer end of pipe, removing any ridges or rough edges. If end is not chamfered, edge of pipe may remove cement from fitting socket and result in a leaking joint.

3 - Clean and dry surfaces to be joined.

4 - Test fit joint and mark depth of fitting on outside of pipe.

5 - Uniformly apply liberal coat of PVC primer for PVC or ABS cleaner for ABS to inside socket surface of fitting and male end of pipe to depth of fitting socket.

6 - Promptly apply solvent cement to end of pipe and inside socket surface of fitting. Cement should be applied lightly but uniformly to inside of socket. Take care to keep excess cement out of socket. Apply second coat to end of pipe.

NOTE - Time is critical at this stage. Do not allow primer to dry before applying cement.

7 - Immediately after applying last coat of cement to pipe, and while both inside socket surface and end of pipe are wet with cement, forcefully insert end of pipe into socket until it bottoms out. Turn pipe 1/4 turn during assembly (but not after pipe is fully inserted) to distribute cement evenly.

NOTE - Assembly should be completed within 20 seconds after last application of cement. Hammer blows should not be used when inserting pipe.

8 - After assembly, wipe excess cement from pipe at end of fitting socket. A properly made joint will show a bead around its entire perimeter. Any gaps may indicate a defective assembly due to insufficient solvent.

9 - Handle joints carefully until completely set.

C-Venting Practices

1. Use recommended piping materials for exhaust piping **(Class E / Class 12 / Schedule 40)**.
2. Secure all joints so that they are gas-tight using approved cement.

   Suspend piping using hangers at a minimum of every 1.52m (5 feet) for Schedule 40 vent pipe. A suitable hanger can be fabricated by using metal or plastic strapping or a large wire tie.

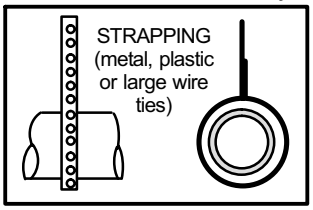

FIGURE 16

3. In areas where piping penetrates joists or interior walls, hole must be large enough to allow clearance on all sides of pipe through center of hole using a hanger.
4. Isolate piping at the point where it exits the outside wall or roof in order to prevent transmission of vibration to the structure.
5. When furnace is installed in a residence where unit is shut down for an extended period of time, such as a vacation home, make provisions for draining condensate collection trap and lines.

Exhaust Piping (Figures 17 and 18)

*NOTE - A 50mm diameter street ell is strapped to the blower deck of 60C-110 units. Street ell **must be** glued directly into the unit flue collar. See figure 17. An 80mm to 50mm (3" to 2") reducing ell is strapped to the blower deck of the 60D-135 units. **In upflow or downflow applications,** the reducing ell **must be** glued directly into the unit flue collar.*

1. Choose the appropriate side for venting in upflow or downflow positions. Exhaust piping exits from the top of the unit in horizontal air discharge applications. Glue the field-provided exhaust vent pipe (or provided street ell or reducing ell in upflow or downflow applications) to the flue collar. Refer to pipe and fittings specifications and gluing procedures.

⚠ IMPORTANT

Exhaust piping and condensate trap must be installed on the same side of the unit in upflow and dowflow applications.

2. All horizontal runs of exhaust pipe must slope back toward unit. A minimum of 6mm (1/4") drop for each 305mm (12 inches) of horizontal run is mandatory for drainage. Horizontal runs of exhaust piping must be supported every 1.5m (5 feet) using hangers.

   NOTE - Exhaust piping should be checked carefully to make sure there are no sags or low spots.
3. On the opposite side of the cabinet, glue the provided 50mm vent plug into the unused flue collar.
4. Route piping to outside of structure. Continue with installation following instructions given in piping termination section.

⚠ CAUTION

Do not discharge exhaust into an existing stack or stack that also serves another gas appliance. If vertical discharge through an existing unused stack is required, insert PVC pipe inside the stack until the end is even with the top or outlet end of the metal stack.

⚠ CAUTION

The exhaust vent pipe operates under positive pressure and must be completely sealed to prevent leakage of combustion products into the living space.

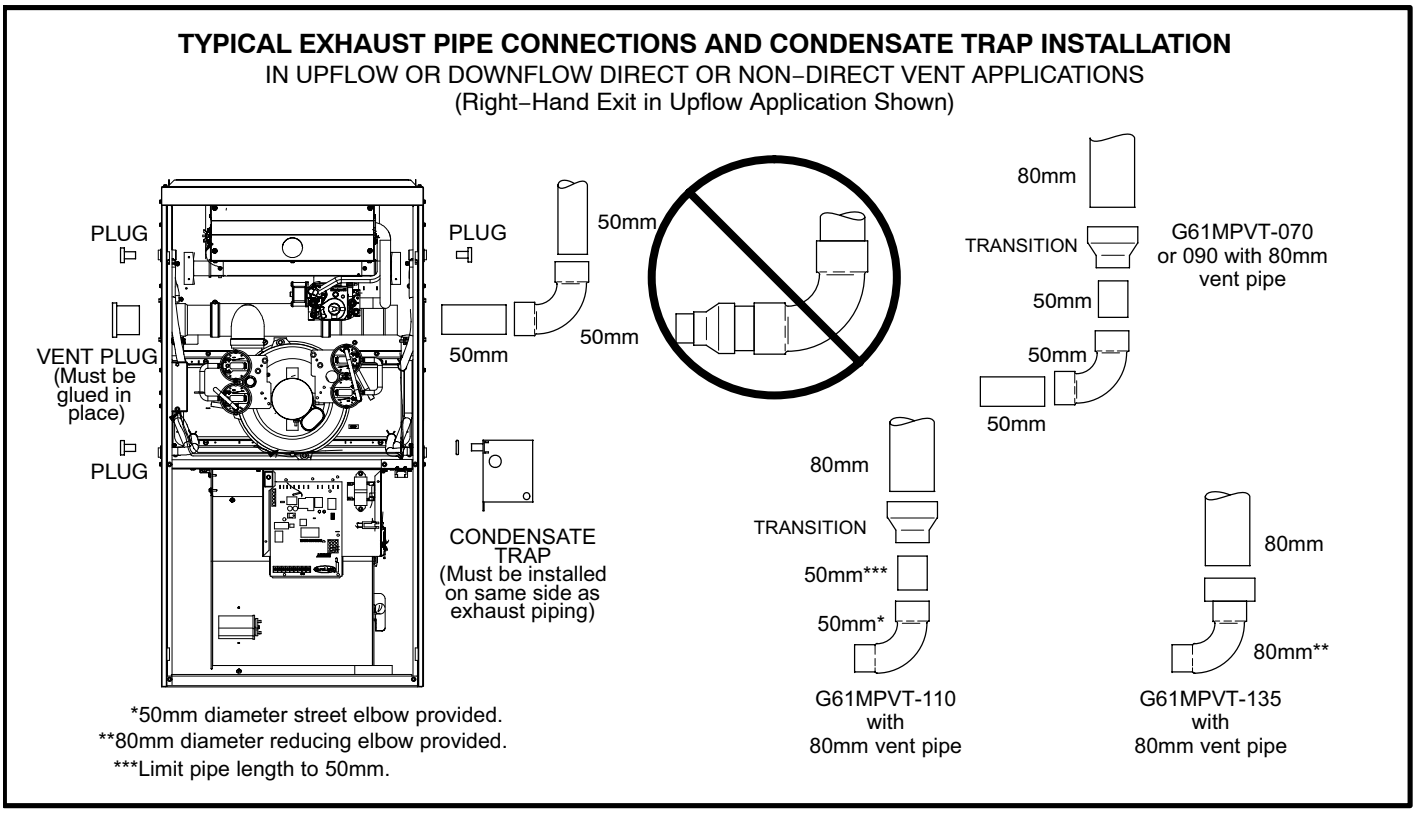

FIGURE 17

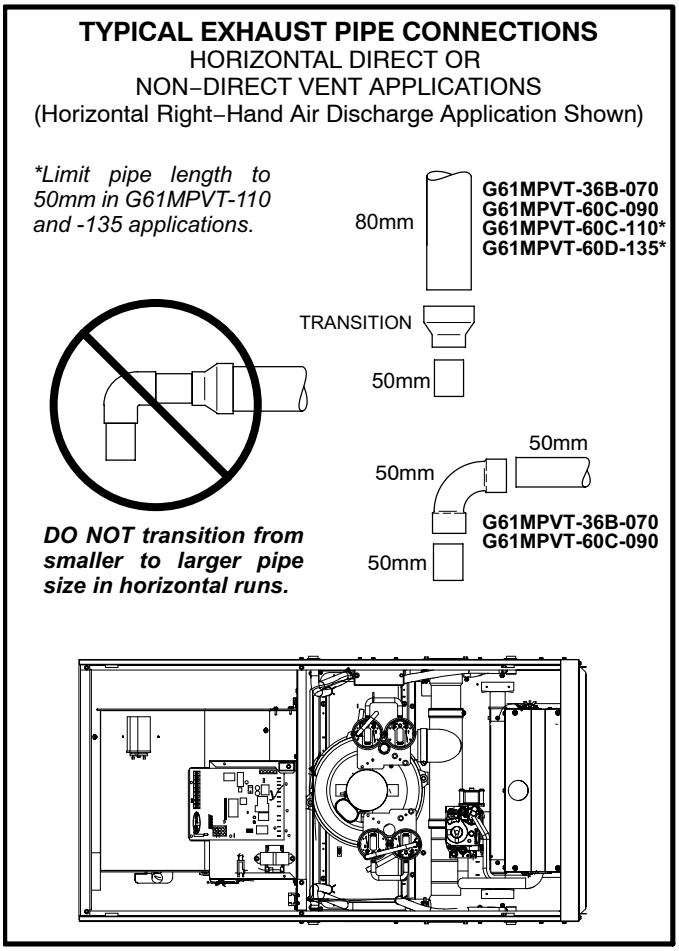

FIGURE 18

Intake Piping

G61MPVT furnaces, with the exception of the G61MPVT-60D-135, can be installed as either a Non-Direct Vent or a Direct Vent gas central furnace. The G61MPVT-60D-135 can only be installed as a Direct Vent (two pipe) gas central furnace. In non-direct vent applications, when intake air will be drawn into the furnace from the surrounding space, the indoor air quality must be considered and guidelines listed in Combustion, Dilution and Ventilation Air section must be followed.

The G61MPVT unit is designed for either left-side or right-side air intake connections in either upflow or downflow applications. In horizontal applications, air intake must be brought in through the top. Intake air piping is independent of exhaust piping.

Follow the next four steps when installing the unit in **direct vent applications,** where combustion air is taken from outdoors and flue gases are discharged outdoors.

1 - Cement intake piping in slip connector located on the side of the burner box.

2 - Use a sheet metal screw to secure the intake pipe to the connector, if desired. A pilot indentation is provided in the slip connector to assist in locating and starting the fastener.

3 - Glue the provided 50mm plug into the unused air intake connector on the opposite side of the cabinet.

4 - Route piping to outside of structure. Continue with installation following instructions given in general guide lines for piping terminations and in intake and exhaust piping terminations for direct vent sections. Refer to figure 19 for pipe sizes.

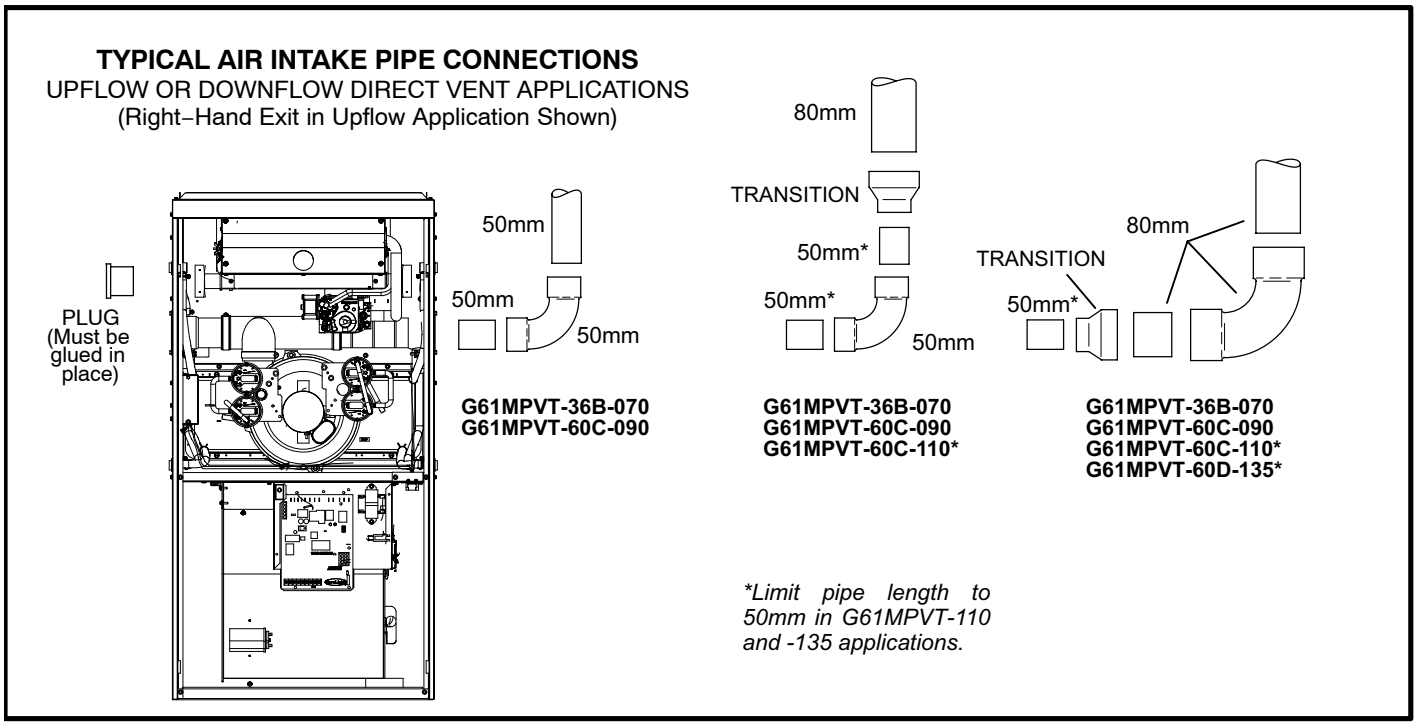

FIGURE 19

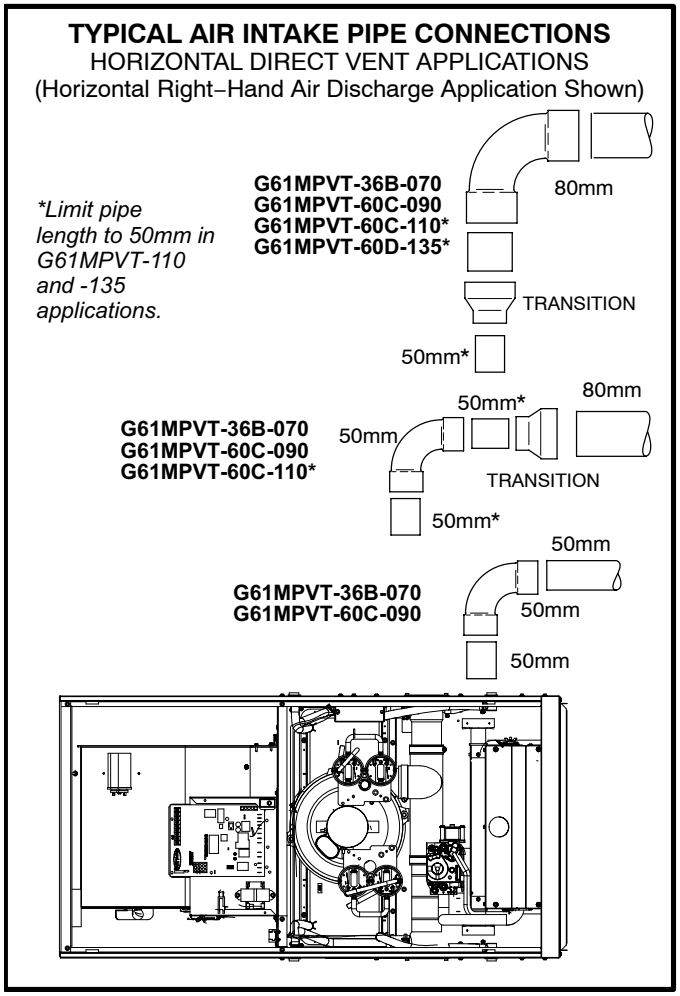

FIGURE 20

Follow the next three steps when installing the unit in **Non-Direct Vent applications** where combustion air is taken from indoors and flue gases are discharged outdoors**.**

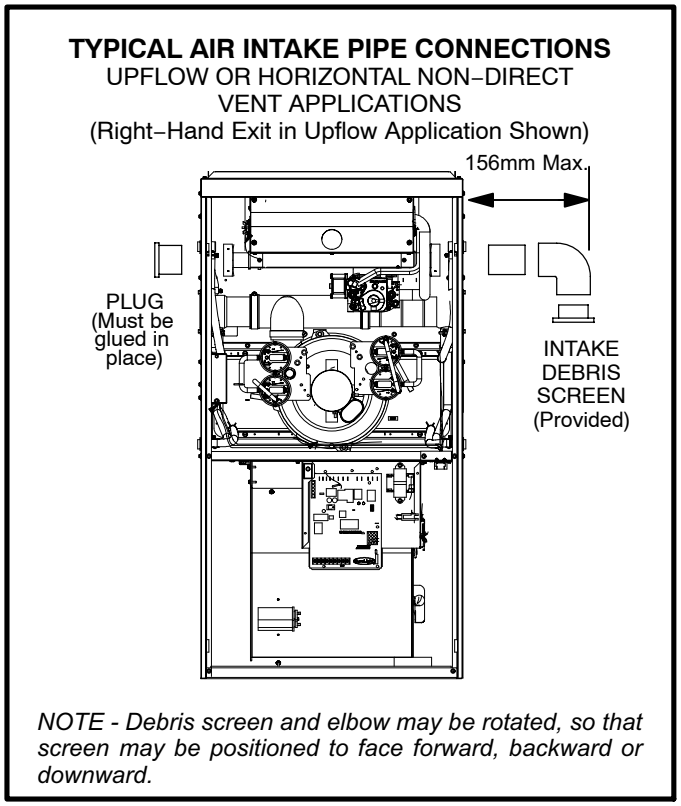

FIGURE 21

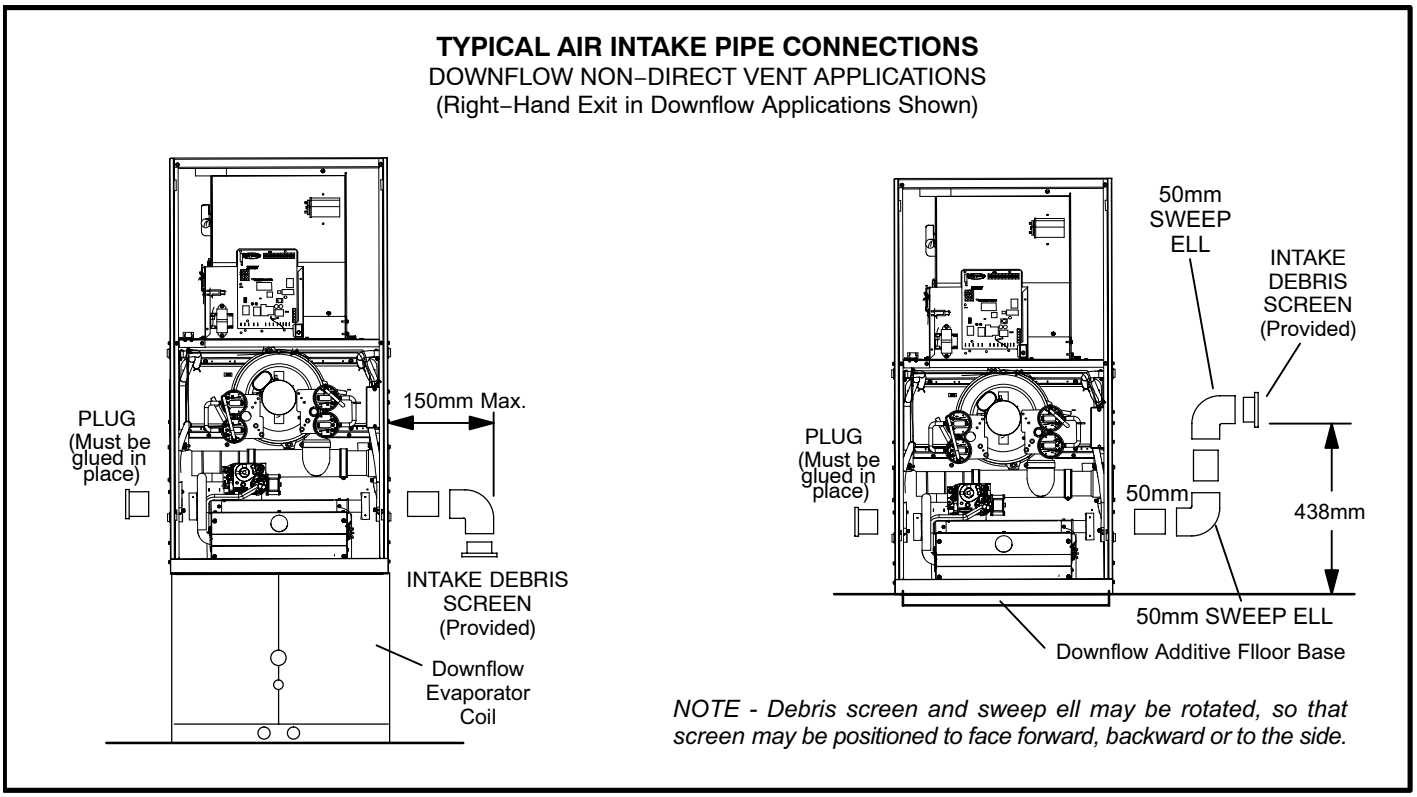

FIGURE 22

1 - Use field-provided materials and the factory-provided air intake screen to route the intake piping as shown in figures 21 and 22. Maintain a minimum clearance of 76mm (3 inches) around the air intake opening. The air intake opening (with the protective screen) should always be directed either downward or straight out. Use 50mm pipe and fittings only and make sure that the air intake does not extend more than 156mm (6inches) beyond the G61MPVT cabinet.
The air intake connector must not be located near the floor. To avoid this complication in downflow applications which do not include a downflow evaporator coil, the intake air routing should be modified as shown in figure 22.

2 - Use a sheet metal screw to secure the intake pipe to the connector, if desired. A pilot indentation is provided in the slip connector to assist in locating and starting the fastener.

3 - Glue the provided 50mm plug into the unused air intake connector on the opposite side of the cabinet.

Testing for Proper Venting and Sufficient Combustion Air (Non-Direct Vent Applications Only)

⚠ WARNING

CARBON MONOXIDE POISONING HAZARD!

Failure to follow the steps outlined below for each appliance connected to the venting system being placed into operation could result in carbon monoxide poisoning or death.
The following steps shall be followed for each appliance connected to the venting system being placed into operation, while all other appliances connected to the venting system are not in operation.

After the G61MPVT gas furnace has been started, the following test should be conducted to ensure proper venting and sufficient combustion air has been provided to the G61MPVT, as well as to other gas-fired appliances which are separately vented. The test should be conducted while all appliances (both in operation and those not in operation) are connected to the venting system being tested. If the venting system has been installed improperly, or if provisions have not been made for sufficient amounts of combustion air, corrections must be made as outlined in the previous section.

1 - Seal any unused openings in the venting system.

2 - Visually inspect the venting system for proper size and horizontal pitch. Determine there is no blockage or restriction, leakage, corrosion, or other deficiencies which could cause an unsafe condition.

3 - To the extent that it is practical, close all building doors and windows and all doors between the space in which the appliances connected to the venting system are located and other spaces of the building.

4 - Close fireplace dampers.

5 - Turn on clothes dryers and any appliances not connected to the venting system. Turn on any exhaust fans, such as range hoods and bathroom exhausts, so they will operate at maximum speed. Do not operate a summer exhaust fan.

6 - Follow the lighting instruction to place the appliance being inspected into operation. Adjust thermostat so appliance will operate continuously.

7 - Use the flame of match or candle to test for spillage of flue gases at the draft hood relief opening after 5 minutes of main burner operation.

8 - If improper venting is observed during any of the above tests, the venting system must be corrected or sufficient combustion/make-up air must be provided.

9 - After determining that each appliance remaining connected to the common venting system properly vents when tested as indicated in step 3, return doors, windows, exhaust fans, fireplace dampers and any other gas-burning appliance to their previous condition of use.

General Guidelines for Vent Terminations for Non-Direct Vent Installations.

In Non-Direct Vent applications, combustion air is taken from indoors and the flue gases are discharged to the outdoors. The G61MPVT is then classified as a non-direct vent gas furnace. In Non-Direct Vent applications, the vent termination is limited by local building codes.

Position termination end according to location given in figure 23. In addition, position termination end so it is free from any obstructions and above the level of snow accumulation (where applicable). The termination should be at least 305mm (12 inches) from any opening through which flue products could enter the building.

At vent termination, care must be taken to maintain protective coatings over building materials (prolonged exposure to exhaust condensate can destroy protective coatings). It is recommended that the exhaust outlet not be located within 1.8m (6 feet) of a condensing unit because the condensate can damage the painted coating.

NOTE - If winter design temperature is below 0°C (32°F), exhaust piping should be insulated with 13mm (1/2 inch), Armaflex or equivalent when run through unheated space. Do not leave any surface area of exhaust pipe open to outside air; exterior exhaust pipe should be insulated with 13mm (1/2 inch) Armaflex or equivalent. In extreme cold climate areas, 19mm (3/4 inch) Armaflex or equivalent may be necessary. Insulation on outside runs of exhaust pipe must be painted or wrapped to protect insulation from deterioration. Exhaust pipe insulation may not be necessary in some specific applications.

NOTE - During extremely cold temperatures, below approximately -6.7°C (20°F), units with long runs of vent pipe through unconditioned space, even when insulated, may form ice in the exhaust termination that prevents the unit from operating properly. Longer run times of at least 5 minutes will alleviate most icing problems. Also, a heating cable may be installed on exhaust piping and termination to prevent freeze-ups. Heating cable installation kit is available from Lennox.

VENT TERMINATION CLEARANCES
(AS 5601)

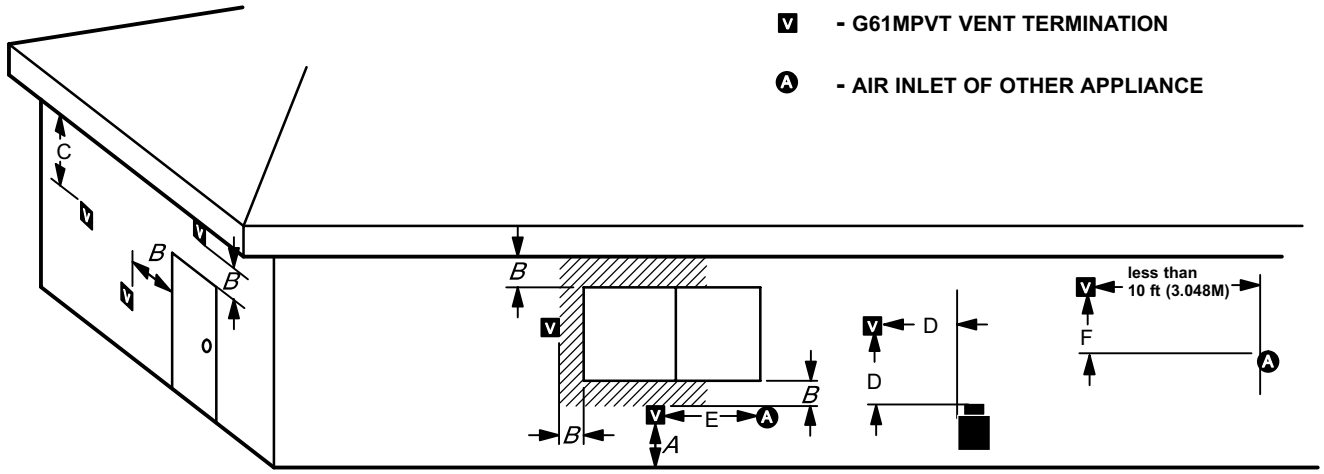

A - *Clearance above ground level* - 305mm.

B - *Clearance horizontally to window or door* that may be opened - 305mm minimum for appliances up to 150Mj/h; Clearance vertically below a window that may be opened - 1000mm minimum for appliances up to 150Mj/h.

C - *Clearance below eaves, balconies and other projections - 305mm.*

D - *Clearance to electric meters, gas meters, regulators and relief equipment* - **1000**mm minimum.

E - *Clearance to non-mechanical air supply inlet or outlet* - 300mm minimum horizontal and 1000mm minimum vertically for appliances up to 150Mj/h;

F - *Clearance to mechanical air supply inlet* including a spa blower -- 1000mm minimum.

G - *Do not point terminations into recessed areas such as window wells, stairwells or alcoves.*

H - *Do not position terminations directly above a walkway.*

FIGURE 23

Details of Intake and Exhaust Piping Terminations for Direct Vent Installations

NOTE - In Direct Vent installations, combustion air is taken from outdoors and flue gases are discharged to outdoors.

Intake and exhaust pipes may be routed either horizontally through an outside wall or vertically through the roof. In attic or closet installations, vertical termination through the roof is preferred. Figures 24 through 27 show typical terminations.

1. Exhaust and intake exits must be in same pressure zone. Do not exit one through the roof and one on the side. Also, do not exit the intake on one side and the exhaust on another side of the house or structure.
2. Intake and exhaust pipes should be placed as close together as possible at termination end (refer to illustrations). Maximum separation is 76mm (3 inches) on roof terminations and 152mm (6 inches) on side wall terminations.
3. If necessary, install a field-provided transition to adapt larger vent pipe size to termination pipe size.
4. On roof terminations, the intake piping should terminate straight down using two 90° elbows (See figure 24).
5. Exhaust piping must terminate straight out or up as shown. In rooftop applications, a reducer may be required on the exhaust piping at the point where it exits the structure to improve the velocity of exhaust away from the intake piping. See table 24.

   NOTE - Care must be taken to avoid recirculation of exhaust back into intake pipe.
6. On field supplied terminations for side wall exits, exhaust piping should extend a maximum of 305mm (12 inches) beyond the outside wall unless supported. Intake piping should be as short as possible.

7. On field supplied terminations, a minimum separation distance between the end of the exhaust pipe and the end of the intake pipe is 203mm (8 inches).

TABLE 24
EXHAUST PIPE TERMINATION SIZE REDUCTION

G61MPVT MODEL	Exhaust Pipe Size	Termination Pipe Size
070	50 or 80mm	40mm
090	50 or 800mm	50mm
110	80mm	50mm*
135	80mm	50mm*

**Approved 3" concentric termination kit terminates with 2-5/8" ID pipe.*

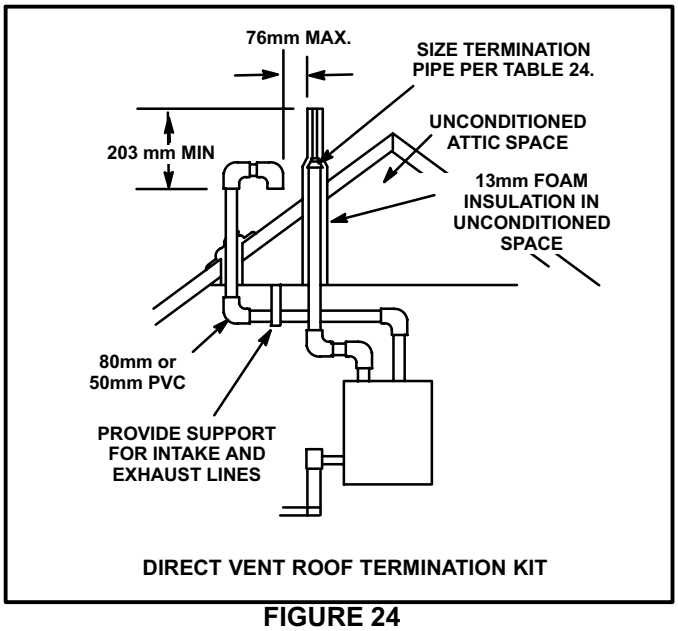

FIGURE 24

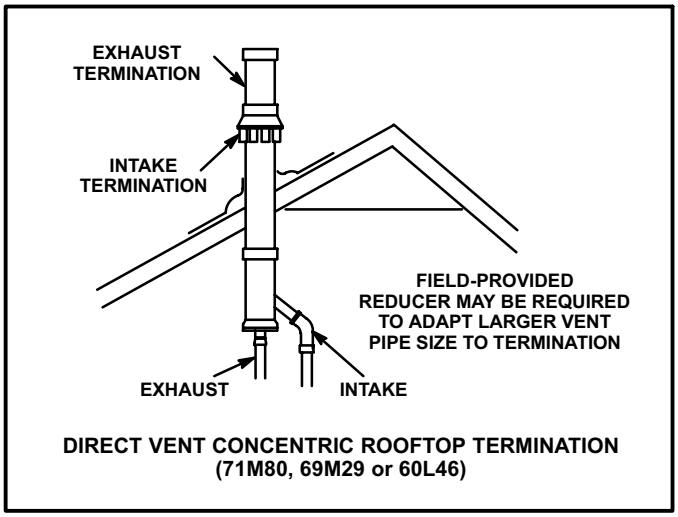

FIGURE 25

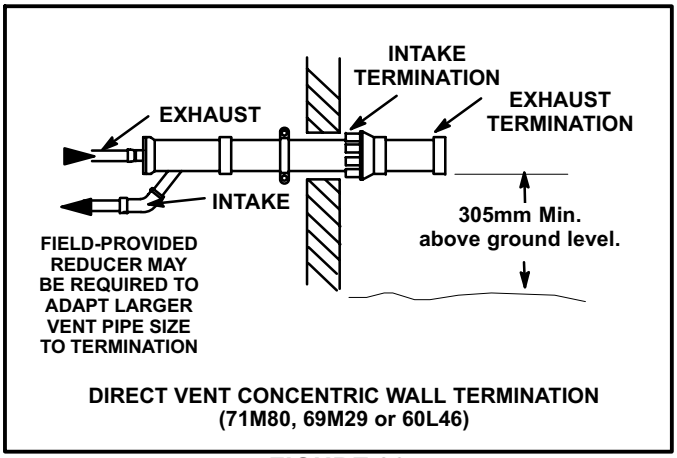

FIGURE 26

Details of Exhaust Piping Terminations for Non-Direct Vent Applications

Exhaust pipes may be routed either horizontally through an outside wall or vertically through the roof. In attic or closet installations, vertical termination through the roof is preferred. Figure 27 shows a typical terminations.

1. Exhaust piping must terminate straight out or up as shown. The termination pipe must be sized as listed in table 24.The specified pipe size ensures proper velocity required to move the exhaust gases away from the building.
2. On field supplied terminations for side wall exits, exhaust piping should extend a maximum of 305mm (12 inches) beyond the outside wall, unless support is provided in the horizontal section.

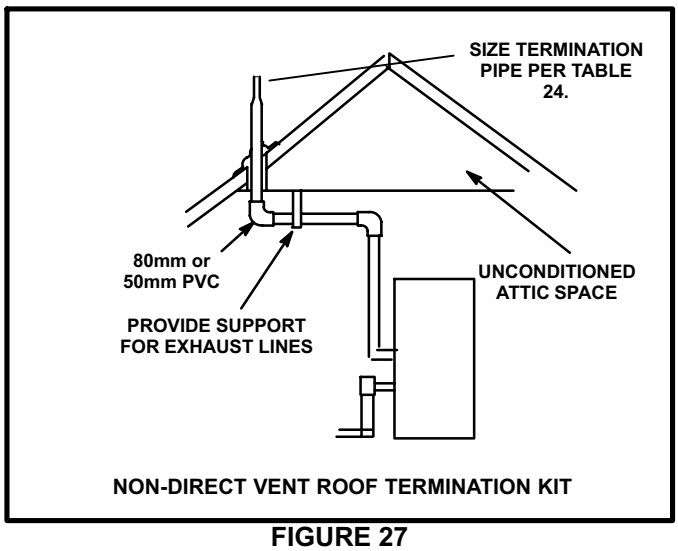

FIGURE 27

Condensate Piping

This unit is designed for either right- or left-side exit of condensate piping in either upflow or downflow applications; however, it must be installed on the same side of the unit as the exhaust piping. In horizontal applications, the condensate trap should extend below the unit. A 140mm (5-1/2-inch) service clearance is required for the condensate trap. Refer to figure 28 for condensate trap locations.

CONDENSATE TRAP LOCATIONS
(Unit shown in upflow position)

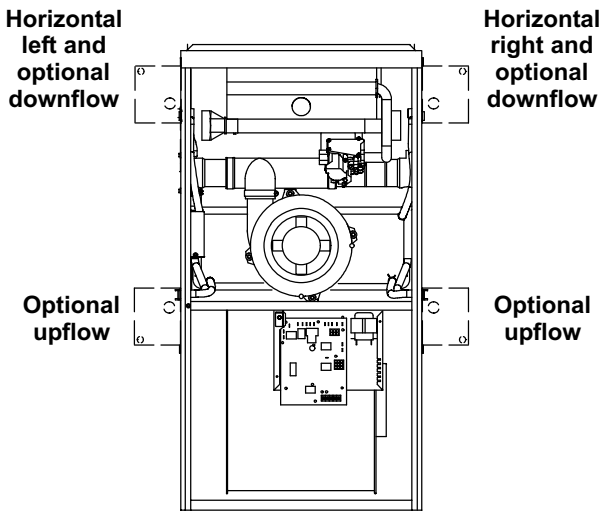

NOTE - In upflow applications where side return air filter is installed on same side as the condensate trap, filter rack must be installed beyond condensate trap to avoid interference.

FIGURE 28

1 - Determine which side condensate piping will exit the unit. Remove plugs from the condensate collar at the appropriate location on the side of the unit.

NOTE - The condensate trap is factory-shipped with two rubber O-rings and two rubber clean-out caps installed. Check to make sure that these items are in place before installing the trap assembly.

2 - Install condensate trap onto the condensate collar. Use provided HI/LO screws to secure two upper flanges of the trap to the collar. Use provided sheet metal screw to secure bottom trap flange to side of unit. See figure 29.

NOTE - In upflow and downflow applications, condensate trap must be installed on the same side as exhaust piping.

3 - Glue the field-provided coupling or pipe to the trap. Install a tee and vent pipe near the trap.

NOTE - The condensate trap drain stubs (both sides) have an outer diameter which will accept a standard 19mm (3/4") PVC coupling. The inner diameter of each stub will accept standard 13mm (1/2") diameter PVC pipe.

NOTE - Vinyl tubing may be used for condensate drain. Tubing must be 32mmOD X 25mm ID (1-1/4" OD X 1" ID) and should be attached to the drain stubs on the trap using a hose clamp.

4 - Glue the field-provided drain line to the tee. Route the drain line to an open drain. As an alternate, clear vinyl tubing may be used to drain condensate away from the trap. Secure the vinyl tubing to the drain stubs on the trap using a hose clamp. Do not overtighten the hose clamp.

Condensate line must be sloped downward away from condensate trap to drain. If drain level is above condensate trap, condensate pump must be used.

⚠ CAUTION

Do not use copper tubing or existing copper condensate lines for drain line.

5 - If unit will be started immediately upon completion of installation, prime trap per procedure outlined in Unit Start-Up section.

6 - Glue the provided cap onto the unused condensate drain line stub.

CONDENSATE ASSEMBLY

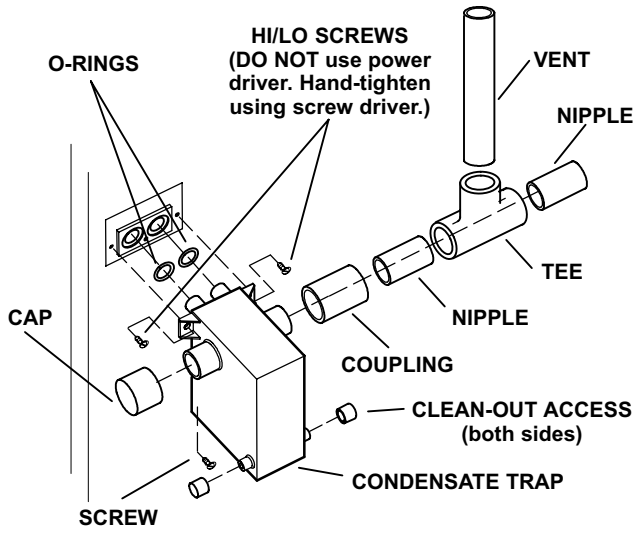

FIGURE 29

III-START-UP

A-Preliminary and Seasonal Checks

1 - Inspect electrical wiring, both field and factory installed for loose connections. Tighten as required.

2 - Check voltage at disconnect switch. Voltage must be within range listed on the nameplate. If not, consult the power company and have voltage condition corrected before starting unit.

B-Heating Start-Up

FOR YOUR SAFETY READ BEFORE OPERATING

⚠WARNING

Do not use this furnace if any part has been underwater. A flood-damaged furnace is extremely dangerous. Attempts to use the furnace can result in fire or explosion. Immediately call a qualified service technician to inspect the furnace and to replace all gas controls, control system parts, and electrical parts that have been wet or to replace the furnace, if deemed necessary.

⚠WARNING

Danger of explosion. Can cause injury or product or property damage. Should the gas supply fail to shut off or if overheating occurs, shut off the gas valve to the furnace before shutting off the electrical supply.

⚠CAUTION

Before attempting to perform any service or maintenance, turn the electrical power to unit OFF at disconnect switch.

Priming Condensate Trap

The condensate trap should be primed with water prior to start-up to ensure proper condensate drainage. Either pour 10 fl. oz. (300 ml) of water into the trap, or follow these steps to prime the trap:

1 - Follow the lighting instructions to place the unit into operation.

2 - Set the thermostat to initiate a heating demand.

3 - Allow the burners to fire for approximately 3 minutes.

4 - Adjust the thermostat to deactivate the heating demand.

5 - Wait for the combustion air inducer to stop. Set the thermostat to initiate a heating demand and again allow the burners to fire for approximately 3 minutes.

6 - Adjust the thermostat to deactivate the heating demand and again wait for the combustion air inducer to stop. At this point, the trap should be primed with sufficient water to ensure proper condensate drain operation.

BEFORE LIGHTING the unit, smell all around the furnace area for gas. Be sure to smell next to the floor because some gas is heavier than air and will settle on the floor.

The gas valve on the G61MPVT is equipped with a gas control knob. Use only your hand to turn the gas control knob. Never use tools. If the knob will not push in or turn by hand, do not try to repair it. Call a qualified service technician. Force or attempted repair may result in a fire or explosion.

Placing the furnace into operation:

G61MPVT units are equipped with an automatic ignition system. Do not attempt to manually light burners on this furnace. Each time the thermostat calls for heat, the burners will automatically light. The ignitor does not get hot when there is no call for heat on units with this ignition system.

⚠WARNING

If you do not follow these instructions exactly, a fire or explosion may result causing property damage, personal injury or death.

Gas Valve Operation (Figure 30)

1 - **STOP**! Read the safety information at the beginning of this section.

2 - Set the thermostat to the lowest setting.

3 - Turn off all electrical power to the unit.

4 - This furnace is equipped with an ignition device which automatically lights the burners. Do **not** try to light the burners by hand.

5 - Remove the upper access panel.

6 - *Honeywell VR8205 Gas Valve* - Turn knob on gas valve clockwise ↷ to **OFF**. Do not force. See figure 30.

7 - Wait five minutes to clear out any gas. If you then smell gas, STOP! Immediately call your gas supplier from a neighbor's phone. Follow the gas supplier's instructions. If you do not smell gas go to next step.

HONEYWELL VR8205 SERIES GAS VALVE

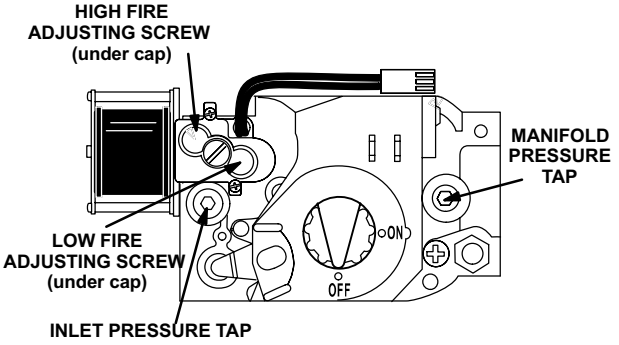

GAS VALVE SHOWN IN OFF POSITION

FIGURE 30

8 - *Honeywell VR8205 Gas Valve* - Turn knob on gas valve counterclockwise to **ON**. Do not force.

9 - Replace the upper access panel.

10- Turn on all electrical power to to the unit.

11- Set the thermostat to desired setting.

NOTE - When unit is initially started, steps 1 through 11 may need to be repeated to purge air from gas line.

12- If the appliance will not operate, follow the instructions "Turning Off Gas to Unit" and call your service technician or gas supplier.

Turning Off Gas to Unit

1 - Set the thermostat to the lowest setting.

2 - Turn off all electrical power to the unit if service is to be performed.

3 - Remove the upper access panel.

4 - *Honeywell VR8205 Gas Valve* - Turn knob on gas valve clockwise to **OFF**. Do not force.

5 - Replace the upper access panel.

C-Safety or Emergency Shutdown

Turn off unit power. Close manual and main gas valves.

D-Extended Period Shutdown

Turn off thermostat or set to "UNOCCUPIED" mode. Close all gas valves (both internal and external to unit) to guarantee no gas leak into combustion chamber. Turn off power to unit. All access panels and covers must be in place and secured.

IV-HEATING SYSTEM SERVICE CHECKS

A-C.S.A. Certification

All units are C.S.A. certified without modifications. Refer to the G61MPVT Installation Instruction.

B-Gas Piping

⚠ CAUTION

If a flexible gas connector is required or allowed by the authority that has jurisdiction, black iron pipe shall be installed at the gas valve and extend outside the furnace cabinet.

⚠ WARNING

Do not exceed 600 in-lbs (50 ft-lbs) torque when attaching the gas piping to the gas valve.

Gas supply piping should not allow more than 0.124 kPa WC drop in pressure between gas meter and unit. Supply gas pipe must not be smaller than unit gas connection.

Compounds used on gas piping threaded joints should be resistant to action of liquefied petroleum gases.

C-Testing Gas Piping

⚠ IMPORTANT

In case emergency shutdown is required, turn off the main shut-off valve and disconnect the main power to unit. These controls should be properly labeled by the installer.

When pressure testing gas lines, the gas valve must be disconnected and isolated. Gas valves can be damaged if subjected to more than 3.5 kPa W.C. See figure 31.

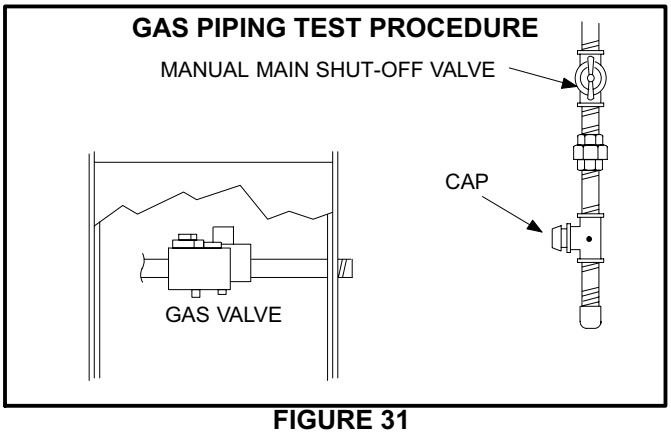

FIGURE 31

When checking piping connections for gas leaks, use preferred means. Kitchen detergents can cause harmful corrosion on various metals used in gas piping. Use of a specialty Gas Leak Detector is strongly recommended. It is available through Lennox under part number 31B2001. See Corp. 8411-L10, for further details.

Do not use matches, candles, flame or any other source of ignition to check for gas leaks.

D-Testing Gas Supply Pressure

When testing supply gas pressure, connect test gauge to inlet pressure tap on the gas valve. See figure 30. Check gas line pressure with unit firing at maximum rate. Low pressure may result in erratic operation or underfire. High pressure can result in permanent damage to gas valve or overfire. See table 25 for operating pressure at unit gas connection (line).

On multiple unit installations, each unit should be checked separately, with and without units operating. Supply pressure must fall within range listed in table 25.

TABLE 25

All G61MPVT Units	Natural	LP
Line Pressure kPa	1.12 - 2.61	1.22 - 2.49

E-Check Manifold Pressure

After line pressure has been checked and adjusted, check manifold pressure. Move pressure gauge to outlet pressure tap located on unit gas valve (GV1). Checks of manifold pressure are made as verification of proper regulator adjustment. Manifold pressure for the G61MPVT can be measured at any time the gas valve is open and is supplying gas to the unit. See table 27 for manifold pressures.

⚠ IMPORTANT

For safety, connect a shut-off valve between the manometer and the gas tap to permit shut off of gas pressure to the manometer.

The gas valve is factory set and should not require adjustment. All gas valves are factory regulated *sensing atmospheric pressure.*

Manifold Pressure Measurement & Adjustment

NOTE - Pressure test adapter kit (10L34) is available from Lennox to facilitate manifold pressure measurement.

1 - Connect test gauge to outlet tap on gas valve.
2 - Disconnect pressure sensing hose from gas valve and plug hose using tape or equivalent. Leave hose barb on valve open.
3 - Start unit on low heat and allow 5 minutes for unit to reach steady state.
4 - While waiting for the unit to stabilize, notice the flame. Flame should be stable and should not lift from burner. Natural gas should burn blue.
5 - After allowing unit to stabilize for 5 minutes, record manifold pressure and compare to value given in table 27.
6 - Repeat steps 3, 4 and 5 on high heat.

NOTE - Shut unit off and remove manometer as soon as an accurate reading has been obtained. Take care to replace pressure tap plug.

NOTE - During this test procedure, the unit will be overfiring:

- Operate unit only long enough to obtain accurate reading to prevent overheating heat exchanger.
- Attempts to clock gas meter during this procedure will be inaccurate. Measure gas flow rate only during normal unit operation.

7 - When test is complete remove obstruction from hose and return hose to gas valve barbed fitting.

F- Proper Gas Flow (Approximate)

Furnace should operate at least 5 minutes before checking gas flow. Determine time in seconds for **two** revolutions of gas through the meter. (Two revolutions assures a more accurate time.) **Divide by two** and compare to time in table 26 below. If manifold pressure matches table 25 and rate is incorrect, check gas orifices for proper size and restriction.

NOTE- To obtain accurate reading, shut off all other gas appliances connected to meter.

TABLE 26

GAS METER CLOCKING CHART				
G61MPVT Unit	Seconds for One Revolution			
	Natural		LP	
	1 cu ft Dial	2 cu ft Dial	1 cu ft Dial	2 cu ft DIAL
-70	55	110	136	272
-90	41	82	102	204
-110	33	66	82	164
-135	27	54	68	136
Natural-1000 btu/cu ft LP-2500 btu/cu ft				

⚠ IMPORTANT

For safety, shut unit off and remove manometer as soon as an accurate reading has been obtained. Take care to replace pressure tap plug.

G- Proper Combustion

Furnace should operate minimum 15 minutes with correct manifold pressure and gas flow rate before checking combustion. See sections E- and F-. Take combustion sample beyond the flue outlet and compare to the following tables. The maximum carbon monoxide reading should not exceed 100 ppm.

TABLE 27
Conversion Kit Requirements and Manifold Pressures

Model Input Size	Gas	Altitude	Manifold Pressure			
		0-610 m (0-2000 ft.)	Low Fire		High Fire	
		Required Conversion Kit	in. w.g.	kPa	in. w.g.	kPa
-070	Nat	N/A	1.7	0.42	3.5	0.87
	LPG	59M13	4.9	1.22	10.0	2.5
-090	Nat	N/A	1.7	0.42	3.5	0.87
	LPG	59M13	4.9	1.22	10.0	2.5
-110	Nat	N/A	1.7	0.42	3.5	0.87
	LPG	59M13	4.9	1.22	10.0	2.5
-135	Nat	N/A	1.7	0.42	3.5	0.87
	LPG	59M13	4.9	1.22	10.0	2.5

TABLE 28
Natural CO_2 Range

Unit	Low Heat	High Heat
G61MPVT-36B-070	4.8 - 6.0	7.2 - 8.5
G61MPVT-60C-090	5.1 - 6.5	7.5 - 8.7
G61MPVT-60C-110	5.3 - 6.5	7.6 - 8.9
G61MPVT-60D-135	5.5 - 6.8	7.8 - 9.2

TABLE 29
LP CO_2 Range

Unit	Low Heat	High Heat
G61MPVT-36B-070	5.7 - 7.0	8.3 - 9.6
G61MPVT-60C-090	5.7 - 7.0	8.4 - 9.7
G61MPVT-60C-110	6.0 - 7.2	8.5 - 9.8
G61MPVT-60D-135	6.4 - 7.7	8.9 - 10.4

H- Condensate pH Range

The condensate is mildly acidic and can be measured with pH indicators. The pH scale is a measurement of acidity and alkalinity. The following scale shows the relative pH of some common liquids as compared with condensate of G61MPVT units. The concentration of the acidity of all these fluids including the condensate is very low and harmless.

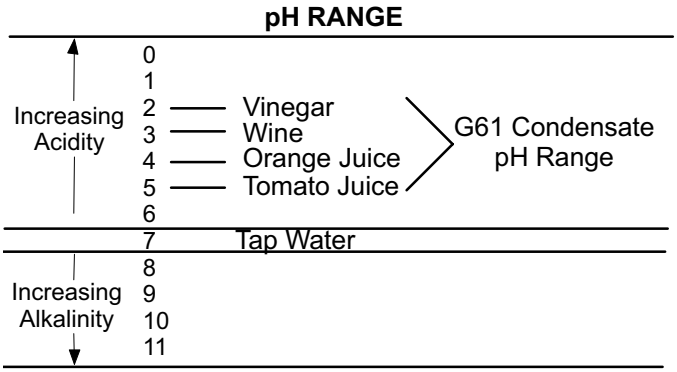

V-TYPICAL OPERATING CHARACTERISTICS

A-Blower Operation and Adjustment

1 - Blower operation is dependent on thermostat control system.

2 - Generally, blower operation is set at thermostat subbase fan switch. With fan switch in ON position, blower operates continuously. With fan switch in AUTO position, blower cycles with demand or runs continuously while heating or cooling circuit cycles.

3 - Depending on the type of indoor thermostat, blower and entire unit will be off when the system switch is in OFF position.

B-Temperature Rise

Temperature rise for G61MPVT units depends on unit input, blower speed, blower horsepower and static pressure as marked on the unit rating plate. The blower speed must be set for unit operation within the range of "TEMP. RISE ° C " listed on the unit rating plate.

To Measure Temperature Rise:

1 - Place plenum thermometers in the supply and return air plenums. Locate supply air thermometer in the first horizontal run of the plenum where it will not pick up radiant heat from the heat exchanger.

2 - Set thermostat for heat call. Unit must operate on second-stage heat. *If using a single-stage thermostat furnace must fire at least 10 minutes before switching to second-stage heat.*

3 - After plenum thermometers have reached their highest and steadiest readings, subtract the two readings. The difference should be in the range listed on the unit rating plate. If the temperature is too low, decrease blower speed. If temperature is too high, first check the firing rate. Provided the firing rate is acceptable, increase blower speed to reduce temperature. To change blower speed taps see tables 6 and 9.

C-External Static Pressure

1 - Tap locations shown in figure 32.

2 - Punch a 6.3 mm diameter hole in supply and return air plenums. Insert manometer hose flush with inside edge of hole or insulation. Seal around the hose with permagum. Connect the zero end of the manometer to the discharge (supply) side of the system. On ducted systems, connect the other end of manometer to the return duct as above. For systems with non-ducted returns, leave the other end of the manometer open to the atmosphere.

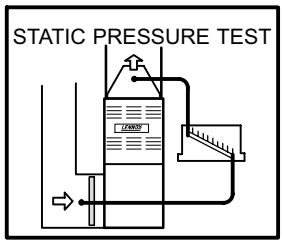

FIGURE 32

3 - With only the blower motor running and the evaporator coil dry, observe the manometer reading. Adjust blower motor speed to deliver the air desired according to the job requirements.

4 - External static pressure drop must not be more than 0.2 kPa W.C.

5 - Seal around the hole when the check is complete.

VI-MAINTENANCE

⚠WARNING

ELECTRICAL SHOCK, FIRE, OR EXPLOSION HAZARD.

Failure to follow safety warnings exactly could result in dangerous operation, serious injury, death or property damage.
Improper servicing could result in dangerous operation, serious injury, death, or property damage.
Before servicing, disconnect all electrical power to furnace.
When servicing controls, label all wires prior to disconnecting. Take care to reconnect wires correctly.
Verify proper operation after servicing.

At the beginning of each heating season, system should be checked as follows by a qualified service technician:

Blower

Check the blower wheel for debris and clean if necessary. The blower motors are prelubricated for extended bearing life. No further lubrication is needed.

⚠WARNING

The blower access panel must be securely in place when the blower and burners are operating. Gas fumes, which could contain carbon monoxide, can be drawn into living space resulting in personal injury or death.

Filters

Filters should be inspected monthly. Clean or replace the filters when necessary to ensure proper furnace operation. Replacement filters must be rated for high velocity airflow. Table 30 lists recommended filter sizes.

TABLE 30

Furnace Cabinet Size	Filter Size -- mm	
	Side Return	Bottom Return
445mm	406 X 635 X 25 (1)	406 X 635 X 25 (1)
533mm	406 X 635 X 25 (1)	508 X 635 X 25 (1)
622mm	406 X 635 X 25 (2)	610 X 635 X 25 (1)

Exhaust and air intake pipes

Check the exhaust and air intake pipes and all connections for tightness and to make sure there is no blockage.

Electrical

1 - Check all wiring for loose connections.
2 - Check for the correct voltage at the furnace (furnace operating).
3 - Check amp-draw on the blower motor.
Motor Nameplate_____Actual_____

Winterizing and Condensate Trap Care

1 - Turn off power to the unit.
2 - Have a shallow pan ready to empty condensate water.
3 - Remove the drain plug from the condensate trap and empty water. Inspect the trap then reinstall the drain plug.

Cleaning Heat Exchanger

If cleaning the heat exchanger becomes necessary, follow the below procedures and refer to figure 1 when disassembling unit. Use papers or protective covering in front of furnace while removing heat exchanger assembly.

⚠ IMPORTANT

Safety glasses and surgical mask should be worn when cleaning heat exchanger and or burner assembly.

1 - Turn off electrical and gas supplies to the furnace.
2 - Remove the upper and lower furnace access panels.
3 - Mark all gas valve wires and disconnect them from valve.
4 - Remove gas supply line connected to gas valve. Remove gas valve/manifold assembly.
5 - Remove sensor wire from sensor. Disconnect 2-pin plug from the ignitor.
6 - Disconnect wires from flame roll-out switches.
7 - Remove burner box cover and remove four burner box screws at the vestibule panel and remove burner box. Set burner box assembly aside. G61MPVT-135 only - Remove and discard two additional shipping screws. See figure 33.
NOTE - If necessary, clean burners at this time. Follow procedures outlined in Burner Cleaning section.
8 - Loosen three clamps and remove flexible exhaust tee.

G61MPVT-135 ONLY

Remove and discard two shipping screws.

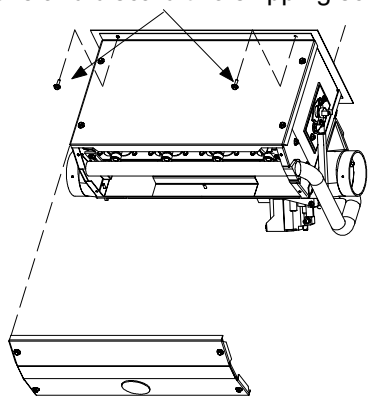

FIGURE 33

9 - Remove 9.5 mm rubber cap from condensate drain plug and drain. Replace cap after draining.

10 - Disconnect condensate drain line from the condensate trap. Remove condensate trap (it may be necessary to cut drain pipe). Remove screws that secure condensate collars to either side of the furnace and remove collars. Remove drain tubes from cold end header collector box.

11 - Disconnect condensate drain tubing from flue collar. Remove screws that secure both flue collars into place. Remove flue collars. It may be necessary to cut the exiting exhaust pipe for removal of the fittings.

12 - Mark and disconnect all combustion air pressure tubing from cold end header collector box.

13 - Mark and remove wires from pressure switches. Remove pressure switches. Keep tubing attached to pressure switches.

14 - Disconnect the 3-pin plug from the combustion air inducer. Disconnect the two wires to the backup secondary limit, if applicable. Remove four screws which secure combustion air inducer to collector box. Remove combustion air inducer assembly. Remove ground wire from vest panel.

15 - Remove electrical junction box from the side of the furnace.

16 - Mark and disconnect any remaining wiring to heating compartment components. Disengage strain relief bushing and pull wiring and bushing through the hole in the blower deck.

17 - Remove the primary limit from the vestibule panel.

18 - Remove two screws from the front cabinet flange at the blower deck. Spread cabinet sides slightly to allow clearance for removal of heat exchanger.

19 - Remove screws along vestibule sides and bottom which secure vestibule panel and heat exchanger assembly to cabinet. Remove two screws from blower rail which secure bottom heat exchanger flange. Remove heat exchanger from furnace cabinet.

20 - Back wash heat exchanger with soapy water solution or steam. **If steam is used it must be below 57.2°C .**

21 - Thoroughly rinse and drain the heat exchanger. Soap solutions can be corrosive. Take care to rinse entire assembly.

22 - Reinstall heat exchanger into cabinet making sure that the clamshells of the heat exchanger assembly are resting on the support located at the rear of the cabinet. Remove the indoor blower to view this area through the blower opening.

23 - Re-secure the supporting screws along the vestibule sides and bottom to the cabinet.

24 - Reinstall cabinet screws on front flange at blower deck.

25 - Reinstall the primary limit on the vestibule panel.

26 - Route heating component wiring through hole in blower deck and reinsert strain relief bushing.

27 - Reinstall electrical junction box.

28 - Reinstall the combustion air inducer. Reconnect the 3-pin plug to the wire harness. Reconnect the two wires to the backup secondary limit, if applicable.

29 - Reinstall pressure switches and reconnect pressure switch wiring.

30 - Carefully connect combustion air pressure switch hosing from pressure switches to proper stubs on cold end header collector box.

31 - Reinstall condensate collars on each side of the furnace. Reconnect drain tubing to collector box.

32 - Reinstall condensate trap on same side as exhaust pipe. Reconnect condensate drain line to the condensate trap.

33 - Use securing screws to reinstall flue collars to either side of the furnace. Reconnect exhaust piping and exhaust drain tubing.

34 - Replace flexible exhaust tee on combustion air inducer and flue collars. Secure using three existing hose clamps.

35 - Reinstall burner box assembly in vestibule area.

36 - Reconnect flame roll-out switch wires.

37 - Reconnect sensor wire and reconnect 2-pin plug from ignitor.

38 - Secure burner box assembly to vestibule panel using four existing screws. **Make sure burners line up in center of burner ports.**

39 - Reinstall gas valve manifold assembly. Reconnect gas supply line to gas valve.

40 - Reinstall burner box cover.

41 - Reconnect wires to gas valve.

42 - Replace the blower compartment access panel.

43 - Refer to instruction on verifying gas and electrical connections when re-establishing supplies.

44 - Follow lighting instructions to light and operate furnace for 5 minutes to ensure that heat exchanger is clean and dry and that furnace is operating properly.

45 - Replace heating compartment access panel.

Cleaning the Burner Assembly

1 - Turn off electrical and gas power supplies to furnace. Remove upper and lower furnace access panels.

2 - Mark all gas valve wires and disconnect them from the valve.

3 - Disconnect the gas supply line from the gas valve. Remove gas valve/manifold assembly.

4 - Mark and disconnect sensor wire from the sensor. Disconnect 2-pin plug from the ignitor at the burner box.

5 - Remove burner box cover and remove four screws which secure burner box assembly to vest panel. Remove burner box from the unit. G61MPVT-135 only - Remove and discard two additional shipping screws. See figure 33.

6 - Use the soft brush attachment on a vacuum cleaner to gently clean the face of the burners. Visually inspect the inside of the burners and crossovers for any blockage caused by foreign matter. Remove any blockage.

7 - Reconnect the sensor wire and reconnect the 2-pin plug to the ignitor wiring harness.

8 - Reinstall the burner box assembly using the existing four screws. Make sure that the burners line up in the center of the burner ports.

9 - Reinstall the gas valve manifold assembly. Reconnect the gas supply line to the gas valve. Reinstall the burner box cover.

10 - Reconnect the gas valve wires to the gas valve.

11 - Replace the blower compartment access panel.

12 - Refer to instruction on verifying gas and electrical connections when re-establishing supplies.

13 - Follow lighting instructions to light and operate furnace for 5 minutes to ensure that heat exchanger is clean and dry and that furnace is operating properly.

14 - Replace heating compartment access panel.

VII- Wiring and Sequence of Operation

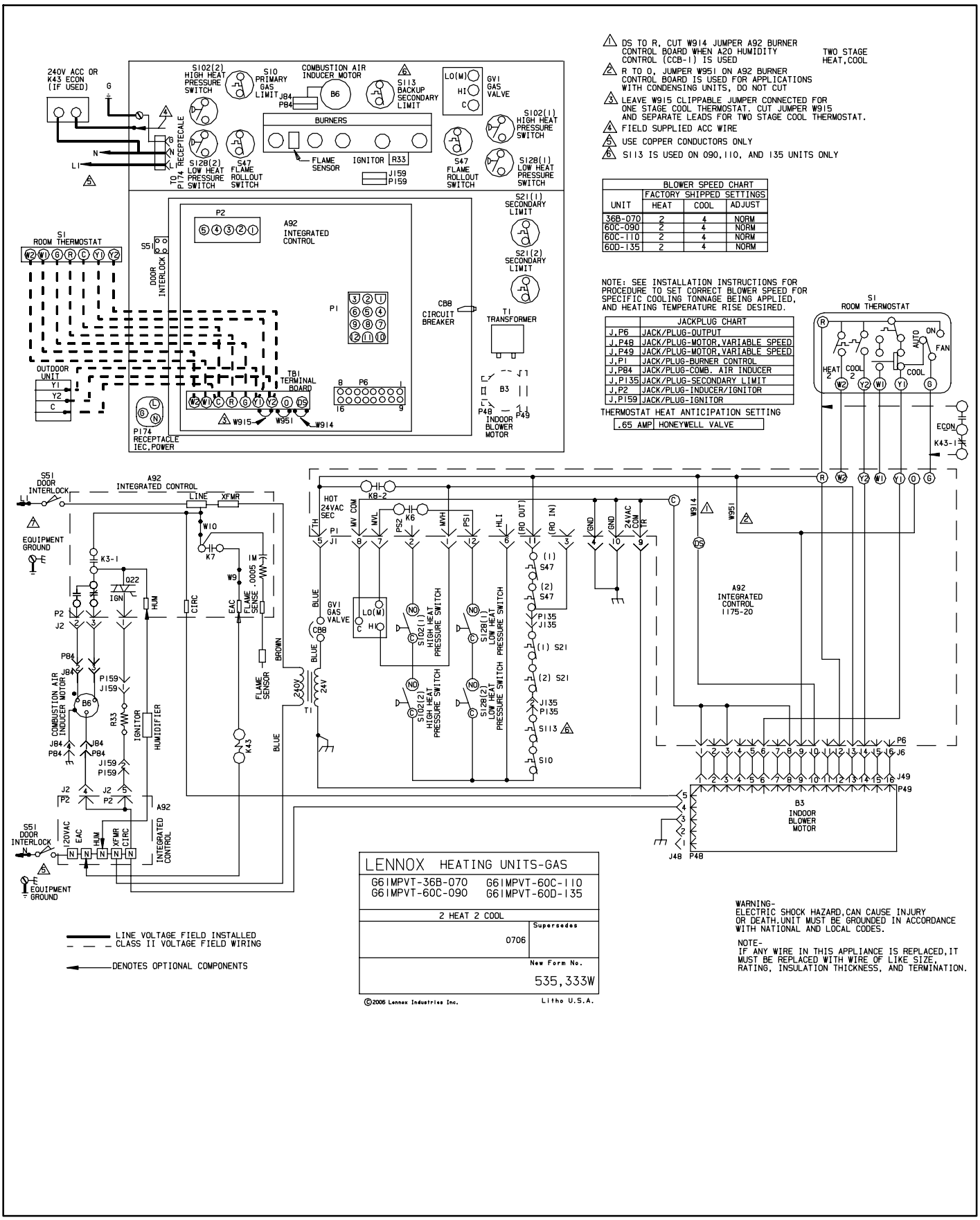

1. DS TO R, CUT W914 JUMPER A92 BURNER CONTROL BOARD WHEN A20 HUMIDITY CONTROL (CCB-1) IS USED — TWO STAGE HEAT,COOL
2. R TO O, JUMPER W951 ON A92 BURNER CONTROL BOARD IS USED FOR APPLICATIONS WITH CONDENSING UNITS, DO NOT CUT
3. LEAVE W915 CLIPPABLE JUMPER CONNECTED FOR ONE STAGE COOL THERMOSTAT. CUT JUMPER W915 AND SEPARATE LEADS FOR TWO STAGE COOL THERMOSTAT.
4. FIELD SUPPLIED ACC WIRE
5. USE COPPER CONDUCTORS ONLY
6. S113 IS USED ON 090,110, AND 135 UNITS ONLY

BLOWER SPEED CHART			
	FACTORY SHIPPED SETTINGS		
UNIT	HEAT	COOL	ADJUST
36B-070	2	4	NORM
60C-090	2	4	NORM
60C-110	2	4	NORM
60D-135	2	4	NORM

NOTE: SEE INSTALLATION INSTRUCTIONS FOR PROCEDURE TO SET CORRECT BLOWER SPEED FOR SPECIFIC COOLING TONNAGE BEING APPLIED, AND HEATING TEMPERATURE RISE DESIRED.

JACKPLUG CHART	
J,P6	JACK/PLUG-OUTPUT
J,P48	JACK/PLUG-MOTOR,VARIABLE SPEED
J,P49	JACK/PLUG-MOTOR,VARIABLE SPEED
J,P1	JACK/PLUG-BURNER CONTROL
J,P84	JACK/PLUG-COMB. AIR INDUCER
J,P135	JACK/PLUG-SECONDARY LIMIT
J,P2	JACK/PLUG-INDUCER/IGNITOR
J,P159	JACK/PLUG-IGNITOR

THERMOSTAT HEAT ANTICIPATION SETTING

.65 AMP	HONEYWELL VALVE

A-G61MPVT Operation

Sequence depends on type thermostat used. G61MPV units are applicable for single stage or two stage thermostats. Both type thermostats are described below. Heating stage jumper dictates which mode unit will operate in. See flow chart for more sequence detail.

Integrated Control Self Check

When there is a call for heat, the integrated control runs a self check. The control checks for S10 primary limit, S21 secondary limit (s) and S47 rollout switch normally closed contacts. The control also checks for S102 high heat and S128 low heat prove switch normally open contacts. Once self check is complete and all safety switches are operational, heat call can continue.

Two-Stage Thermostat, Two Stage Heat. Heat Staging Jumper in NONE Position

1- Integrated control energizes combustion air inducer B6 on low heat speed. Combustion air inducer runs until S128 low heat prove switch contacts close (switch must close within 2 1/2 minutes or control goes into Watchguard Pressure Switch mode. High heat prove switch S102 may also close). A 15 second pre-purge follows once S128 closes.

2- Integrated control begins 20 second ignitor warm up period.

3- Gas valve opens on first stage for a 4 second trial for ignition. Ignitor stays energized during the trial or until flame sensed.

4- Flame is sensed, gas valve remains on first stage heat, ignitor de-energizes.

5- After 45 second delay, indoor blower B3 is energized on low heat speed.

The furnace will stay in this mode until first stage demand is satisfied OR a second stage heat demand is initiated.

6- Second stage heat demand initiated. A 30 second second stage recognition period begins. (If first stage heat has been energized for more than 30 seconds the control *immediately* goes into second stage heat)

7- The combustion air inducer ramps up to high heat speed.

8- S102 high heat prove switch closes and the gas valve energizes second stage heat.

9- B3 indoor blower ramps up to high heat speed.

Single-Stage Thermostat, Two Stage Heat. Heat Staging Jumper in Either 10-Minute or 15-Minute Stage Delay Position

NOTE - In these applications, two-stage heat will be initiated by the integrated control if heating demand has not been satisfied after the field adjustable period (10 or 15 minutes).

1- Integrated control energizes combustion air inducer B6 on low heat speed. Combustion air inducer runs until S128 low heat prove switch contacts close (switch must close within 2 1/2 minutes or control goes into Watchguard Pressure Switch mode. High heat prove switch S102 may also close). A 15 second pre-purge follows once S128 closes.

2- Integrated control begins 20 second ignitor warm up period.

3- Gas valve opens on first stage for a 4 second trial for ignition. Ignitor stays energized during the trial or until flame sensed.

4- Flame is sensed, gas valve remains on first stage heat, ignitor de-energizes.

5- After 45 second delay, indoor blower B3 is energized on low heat speed.

6- A 10 minute (factory set) or 15 minute (field set) second stage heat delay period begins.

7- After the delay the combustion air inducer ramps up to high heat speed.

8- S102 high heat prove switch closes and the gas valve energizes second stage heat.

9- B3 indoor blower ramps up to high heat speed.

Troubleshooting: Heating Sequence of Operation

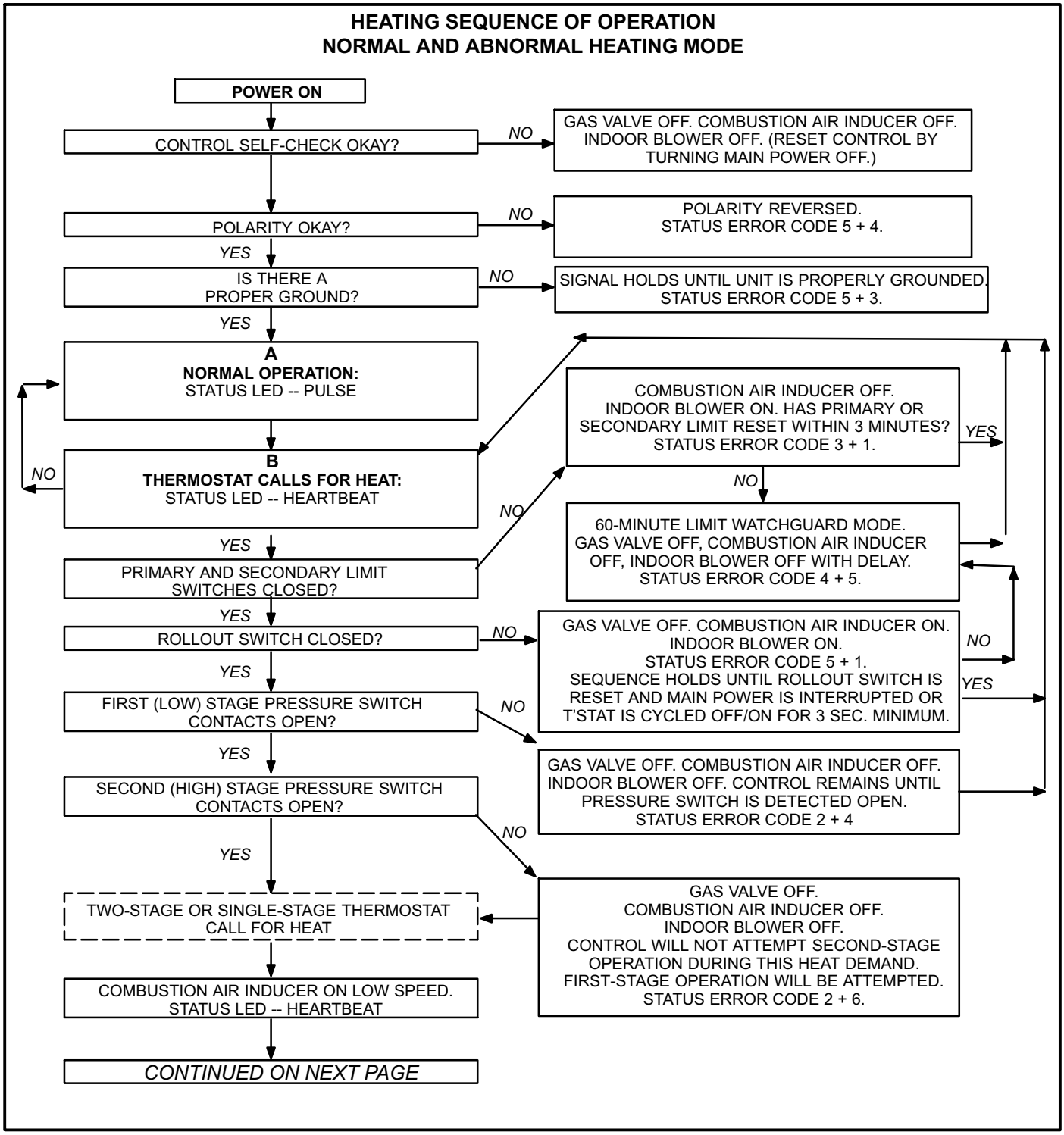

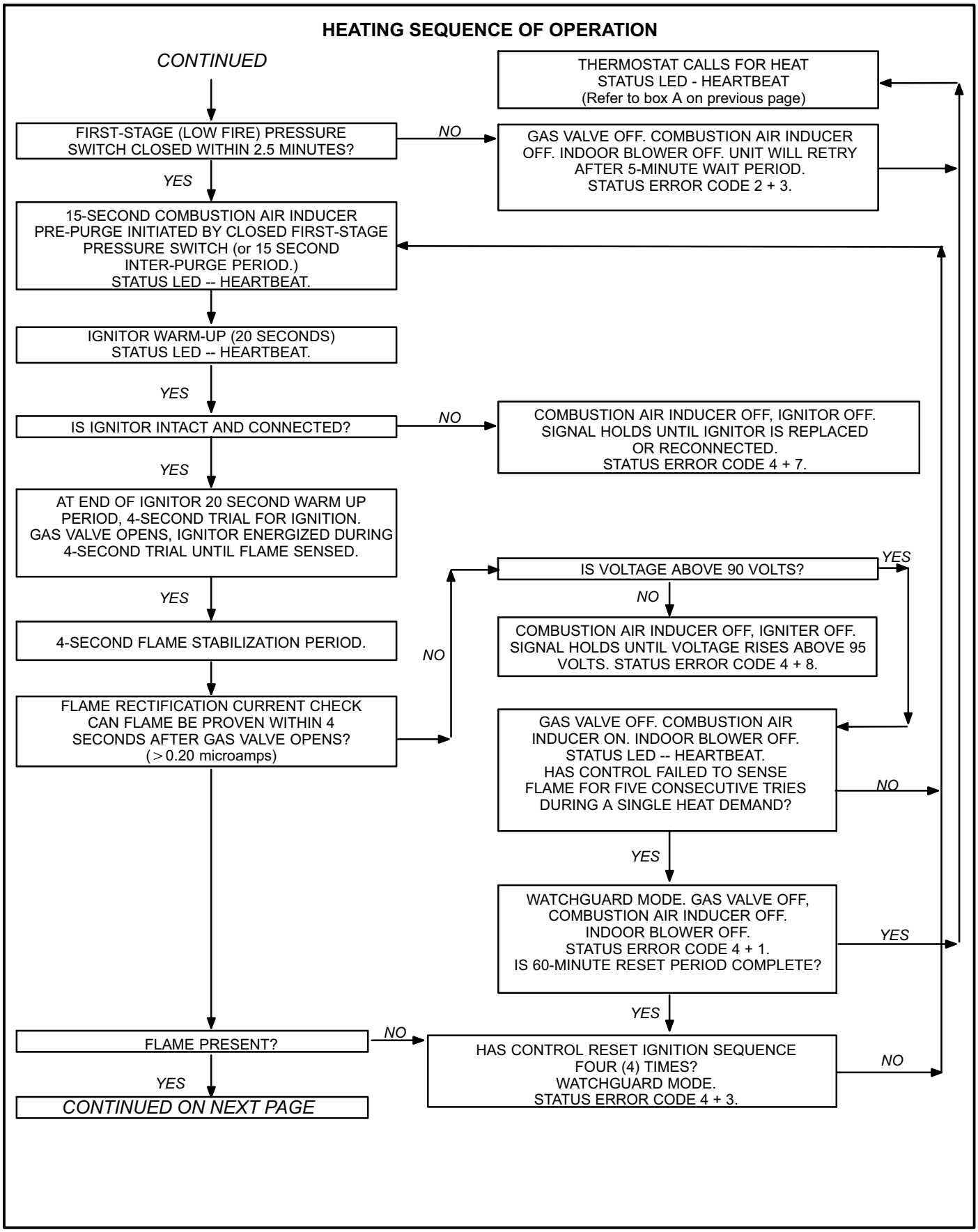
HEATING SEQUENCE OF OPERATION
CONTINUED
THERMOSTAT CALLS FOR HEAT
STATUS LED - HEARTBEAT
(Refer to box A on previous page)
FIRST-STAGE (LOW FIRE) PRESSURE SWITCH CLOSED WITHIN 2.5 MINUTES?
NO
GAS VALVE OFF. COMBUSTION AIR INDUCER OFF. INDOOR BLOWER OFF. UNIT WILL RETRY AFTER 5-MINUTE WAIT PERIOD.
STATUS ERROR CODE 2 + 3.
YES
15-SECOND COMBUSTION AIR INDUCER PRE-PURGE INITIATED BY CLOSED FIRST-STAGE PRESSURE SWITCH (or 15 SECOND INTER-PURGE PERIOD.)
STATUS LED -- HEARTBEAT.
IGNITOR WARM-UP (20 SECONDS)
STATUS LED -- HEARTBEAT.
YES
IS IGNITOR INTACT AND CONNECTED?
NO
COMBUSTION AIR INDUCER OFF, IGNITOR OFF.
SIGNAL HOLDS UNTIL IGNITOR IS REPLACED OR RECONNECTED.
STATUS ERROR CODE 4 + 7.
YES
AT END OF IGNITOR 20 SECOND WARM UP PERIOD, 4-SECOND TRIAL FOR IGNITION.
GAS VALVE OPENS, IGNITOR ENERGIZED DURING 4-SECOND TRIAL UNTIL FLAME SENSED.
YES
4-SECOND FLAME STABILIZATION PERIOD.
FLAME RECTIFICATION CURRENT CHECK
CAN FLAME BE PROVEN WITHIN 4 SECONDS AFTER GAS VALVE OPENS?
(>0.20 microamps)
NO
IS VOLTAGE ABOVE 90 VOLTS?
YES
NO
COMBUSTION AIR INDUCER OFF, IGNITER OFF.
SIGNAL HOLDS UNTIL VOLTAGE RISES ABOVE 95 VOLTS. STATUS ERROR CODE 4 + 8.
GAS VALVE OFF. COMBUSTION AIR INDUCER ON. INDOOR BLOWER OFF.
STATUS LED -- HEARTBEAT.
HAS CONTROL FAILED TO SENSE FLAME FOR FIVE CONSECUTIVE TRIES DURING A SINGLE HEAT DEMAND?
NO
YES
WATCHGUARD MODE. GAS VALVE OFF, COMBUSTION AIR INDUCER OFF.
INDOOR BLOWER OFF.
STATUS ERROR CODE 4 + 1.
IS 60-MINUTE RESET PERIOD COMPLETE?
YES
YES
FLAME PRESENT?
NO
HAS CONTROL RESET IGNITION SEQUENCE FOUR (4) TIMES?
WATCHGUARD MODE.
STATUS ERROR CODE 4 + 3.
NO
YES
CONTINUED ON NEXT PAGE

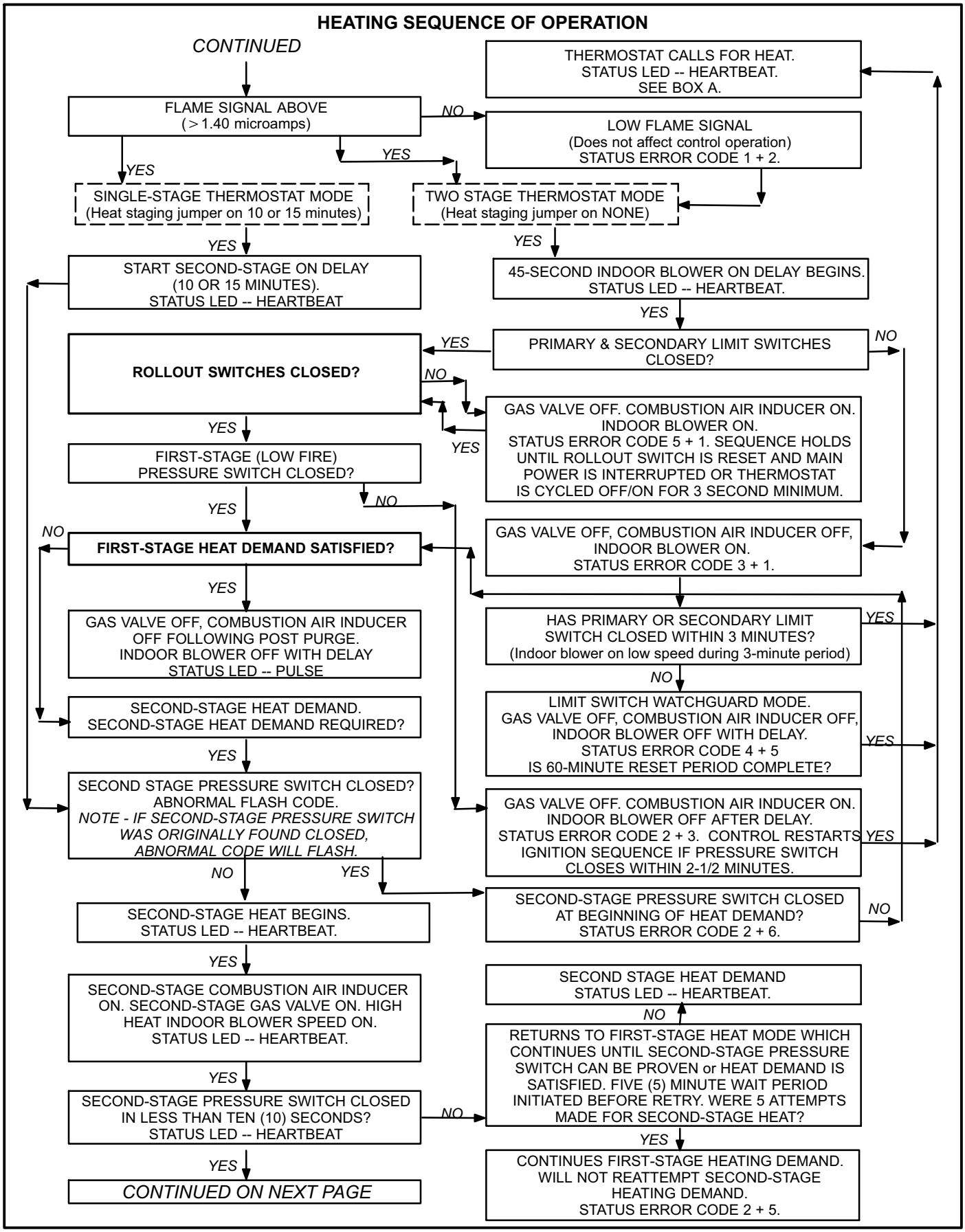
HEATING SEQUENCE OF OPERATION
CONTINUED
FLAME SIGNAL ABOVE (>1.40 microamps)
NO
YES
THERMOSTAT CALLS FOR HEAT. STATUS LED -- HEARTBEAT. SEE BOX A.
LOW FLAME SIGNAL (Does not affect control operation) STATUS ERROR CODE 1 + 2.
SINGLE-STAGE THERMOSTAT MODE (Heat staging jumper on 10 or 15 minutes)
TWO STAGE THERMOSTAT MODE (Heat staging jumper on NONE)
START SECOND-STAGE ON DELAY (10 OR 15 MINUTES). STATUS LED -- HEARTBEAT
45-SECOND INDOOR BLOWER ON DELAY BEGINS. STATUS LED -- HEARTBEAT.
PRIMARY & SECONDARY LIMIT SWITCHES CLOSED?
ROLLOUT SWITCHES CLOSED?
GAS VALVE OFF. COMBUSTION AIR INDUCER ON. INDOOR BLOWER ON. STATUS ERROR CODE 5 + 1. SEQUENCE HOLDS UNTIL ROLLOUT SWITCH IS RESET AND MAIN POWER IS INTERRUPTED OR THERMOSTAT IS CYCLED OFF/ON FOR 3 SECOND MINIMUM.
FIRST-STAGE (LOW FIRE) PRESSURE SWITCH CLOSED?
FIRST-STAGE HEAT DEMAND SATISFIED?
GAS VALVE OFF, COMBUSTION AIR INDUCER OFF, INDOOR BLOWER ON. STATUS ERROR CODE 3 + 1.
GAS VALVE OFF, COMBUSTION AIR INDUCER OFF FOLLOWING POST PURGE. INDOOR BLOWER OFF WITH DELAY STATUS LED -- PULSE
HAS PRIMARY OR SECONDARY LIMIT SWITCH CLOSED WITHIN 3 MINUTES? (Indoor blower on low speed during 3-minute period)
SECOND-STAGE HEAT DEMAND. SECOND-STAGE HEAT DEMAND REQUIRED?
LIMIT SWITCH WATCHGUARD MODE. GAS VALVE OFF, COMBUSTION AIR INDUCER OFF, INDOOR BLOWER OFF WITH DELAY. STATUS ERROR CODE 4 + 5 IS 60-MINUTE RESET PERIOD COMPLETE?
SECOND STAGE PRESSURE SWITCH CLOSED? ABNORMAL FLASH CODE. NOTE - IF SECOND-STAGE PRESSURE SWITCH WAS ORIGINALLY FOUND CLOSED, ABNORMAL CODE WILL FLASH.
GAS VALVE OFF. COMBUSTION AIR INDUCER ON. INDOOR BLOWER OFF AFTER DELAY. STATUS ERROR CODE 2 + 3. CONTROL RESTARTS IGNITION SEQUENCE IF PRESSURE SWITCH CLOSES WITHIN 2-1/2 MINUTES.
SECOND-STAGE HEAT BEGINS. STATUS LED -- HEARTBEAT.
SECOND-STAGE PRESSURE SWITCH CLOSED AT BEGINNING OF HEAT DEMAND? STATUS ERROR CODE 2 + 6.
SECOND-STAGE COMBUSTION AIR INDUCER ON. SECOND-STAGE GAS VALVE ON. HIGH HEAT INDOOR BLOWER SPEED ON. STATUS LED -- HEARTBEAT.
SECOND STAGE HEAT DEMAND STATUS LED -- HEARTBEAT.
RETURNS TO FIRST-STAGE HEAT MODE WHICH CONTINUES UNTIL SECOND-STAGE PRESSURE SWITCH CAN BE PROVEN or HEAT DEMAND IS SATISFIED. FIVE (5) MINUTE WAIT PERIOD INITIATED BEFORE RETRY. WERE 5 ATTEMPTS MADE FOR SECOND-STAGE HEAT?
SECOND-STAGE PRESSURE SWITCH CLOSED IN LESS THAN TEN (10) SECONDS? STATUS LED -- HEARTBEAT
CONTINUES FIRST-STAGE HEATING DEMAND. WILL NOT REATTEMPT SECOND-STAGE HEATING DEMAND. STATUS ERROR CODE 2 + 5.
CONTINUED ON NEXT PAGE

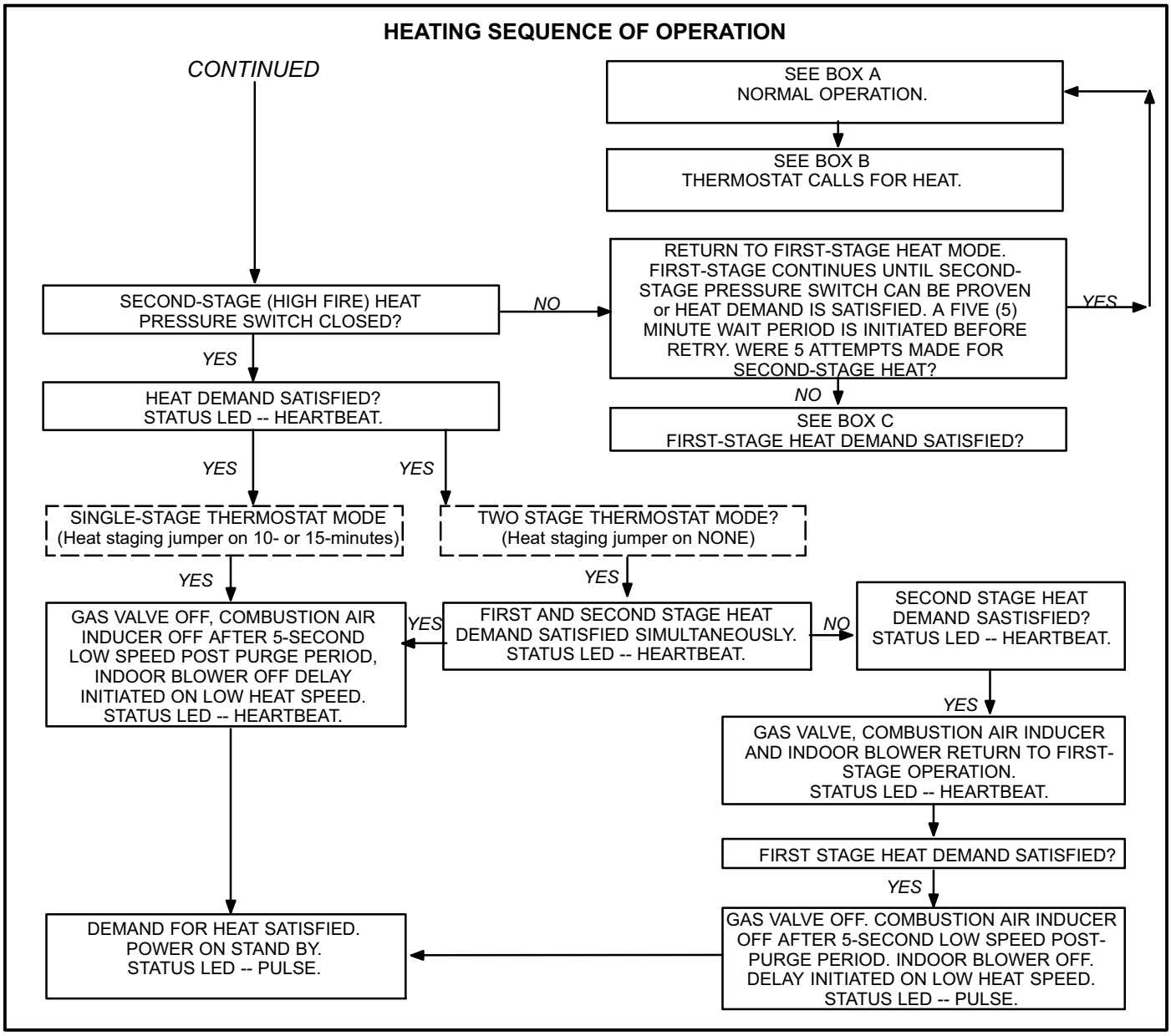
HEATING SEQUENCE OF OPERATION
CONTINUED
SEE BOX A
NORMAL OPERATION.
SEE BOX B
THERMOSTAT CALLS FOR HEAT.
RETURN TO FIRST-STAGE HEAT MODE. FIRST-STAGE CONTINUES UNTIL SECOND-STAGE PRESSURE SWITCH CAN BE PROVEN or HEAT DEMAND IS SATISFIED. A FIVE (5) MINUTE WAIT PERIOD IS INITIATED BEFORE RETRY. WERE 5 ATTEMPTS MADE FOR SECOND-STAGE HEAT?
YES
SECOND-STAGE (HIGH FIRE) HEAT PRESSURE SWITCH CLOSED?
NO
YES
NO
SEE BOX C
FIRST-STAGE HEAT DEMAND SATISFIED?
HEAT DEMAND SATISFIED?
STATUS LED -- HEARTBEAT.
YES
YES
SINGLE-STAGE THERMOSTAT MODE
(Heat staging jumper on 10- or 15-minutes)
TWO STAGE THERMOSTAT MODE?
(Heat staging jumper on NONE)
YES
YES
GAS VALVE OFF, COMBUSTION AIR INDUCER OFF AFTER 5-SECOND LOW SPEED POST PURGE PERIOD, INDOOR BLOWER OFF DELAY INITIATED ON LOW HEAT SPEED.
STATUS LED -- HEARTBEAT.
YES
FIRST AND SECOND STAGE HEAT DEMAND SATISFIED SIMULTANEOUSLY.
STATUS LED -- HEARTBEAT.
NO
SECOND STAGE HEAT DEMAND SASTISFIED?
STATUS LED -- HEARTBEAT.
YES
GAS VALVE, COMBUSTION AIR INDUCER AND INDOOR BLOWER RETURN TO FIRST-STAGE OPERATION.
STATUS LED -- HEARTBEAT.
FIRST STAGE HEAT DEMAND SATISFIED?
YES
DEMAND FOR HEAT SATISFIED.
POWER ON STAND BY.
STATUS LED -- PULSE.
GAS VALVE OFF. COMBUSTION AIR INDUCER OFF AFTER 5-SECOND LOW SPEED POST-PURGE PERIOD. INDOOR BLOWER OFF. DELAY INITIATED ON LOW HEAT SPEED.
STATUS LED -- PULSE.

Troubleshooting: Cooling Sequence of Operation

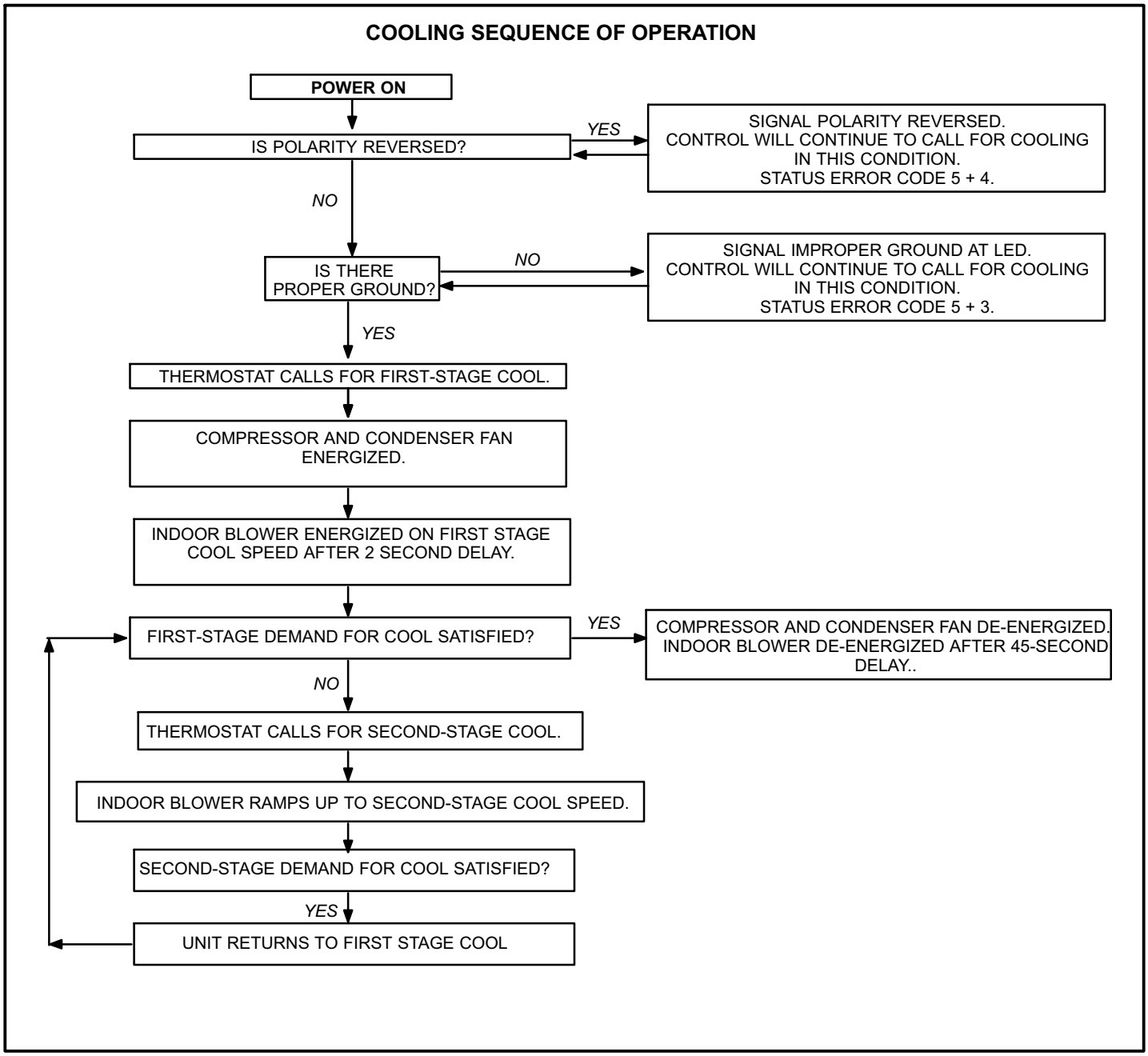

Troubleshooting: Continuous Fan Sequence of Operation

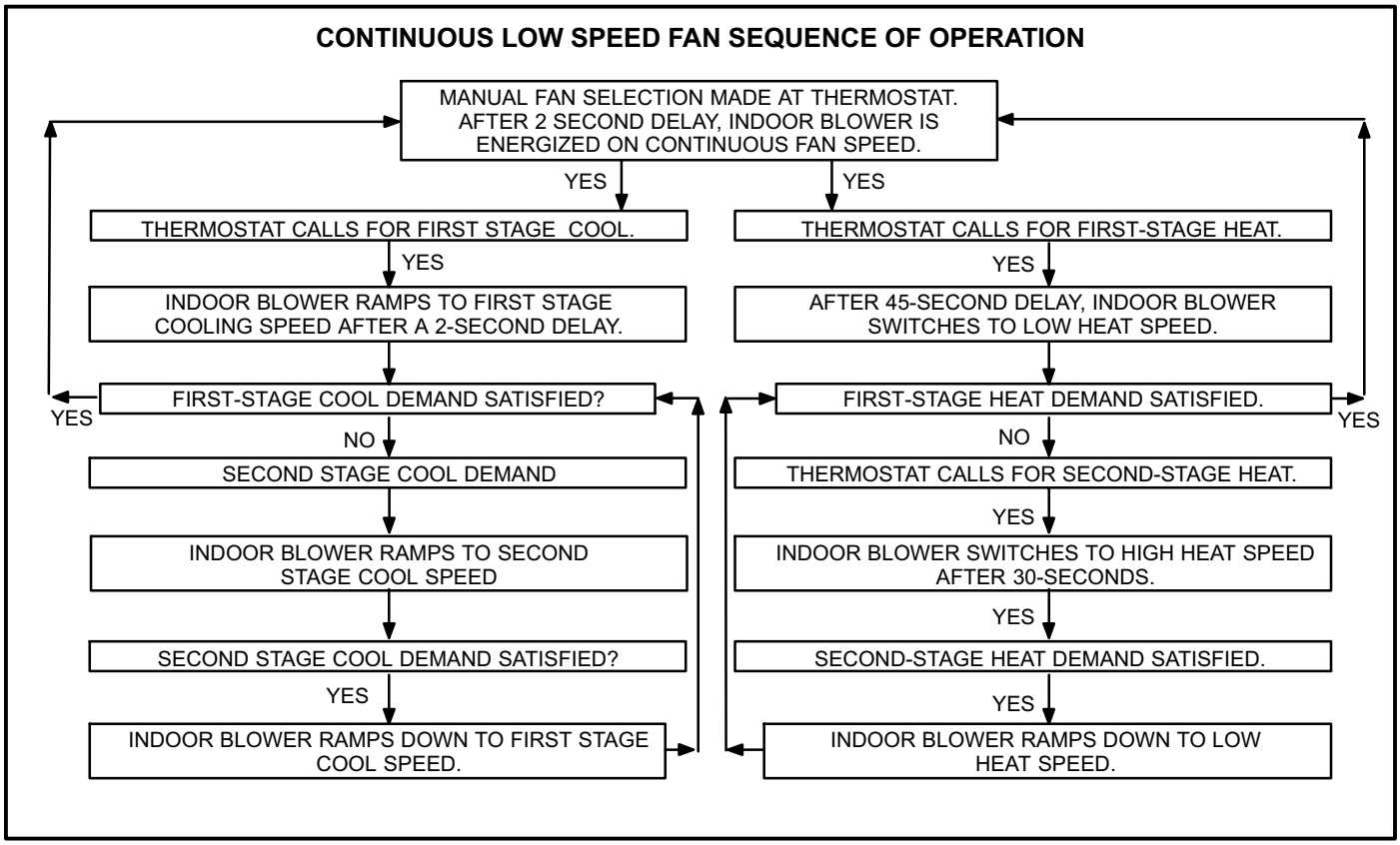

IX- Field Wiring Applications and Jumper Settings

TABLE 31
Field Wiring Applications

Thermostat	Jumper Settings (See figure 4)				Wiring Connections
	Heat Staging Jumper	W915 Two-Stage Cooling	W914	W951 Heat Pumps	
1Heat / 1 Cool *NOTE - Use heat staging jumper to set second-stage heat ON delay. No delay (None), 10 minutes, or 15 minutes.*	15 Minutes	Intact	Intact	Intact	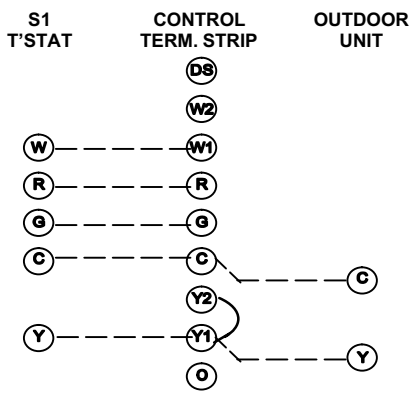
2 Heat / 1 Cool *NOTE - Use heat staging jumper to set second-stage heat ON delay. No delay (None), 10 minutes, or 15 minutes.*	10 Minutes	Intact	Intact	Intact