LENNOX

ENGINEERING DATA

PACKAGED COOLING - 50HZ

CHA16
-024-036-048-060

7.0 to 17.6 kW (2 to 5 Ton)

Cooling Capacity - 5.6 to 14.8 kW (19 200 to 50 500 Btuh)

Optional Electric Heat - 4 to 19 kW (14 300 to 65 400 Btuh)

Bulletin Number 490102
February 2001
Supersedes 490034 (October 1994)

CHA16 Basic Unit

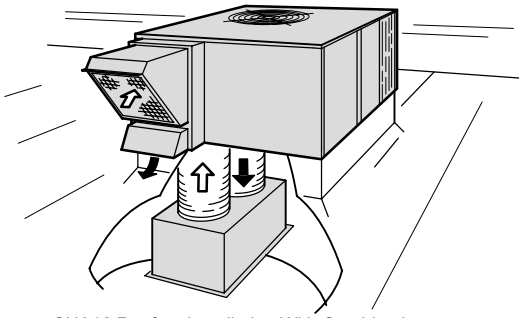

CHA16 Rooftop Installation With Combination Supply and Return Air System

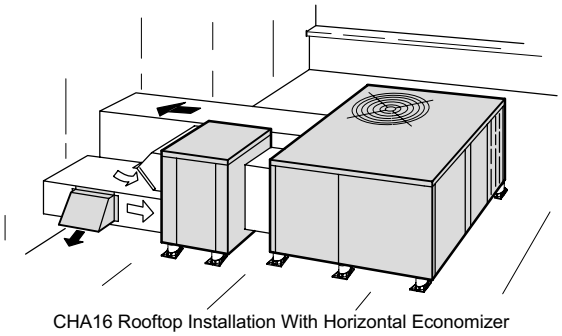

CHA16 Rooftop Installation With Horizontal Economizer

MODEL NUMBER IDENTIFICATION

CHA 16 - 036 - 1 M

Unit Type
CHA = Packaged Cooling Unit

Series

Nominal Cooling Capacity kW (Tons)
024 - 7.0 (2)
036 - 10.6 (3)
048 - 14.1 (4)
060 - 17.6 (5)

Minor Revision Number

Voltage
M = 380/420v-3 phase-50hz
T = 220/240v-1 phase-50hz

FEATURES

Air Flow Choice
- Bottom (down-flow) or horizontal supply and return air.

Cabinet
- Heavy gauge, galvanized steel cabinet with five station metal wash process.
- Powder enamel paint, electrostatically bonded to the metal, provides superior rust and corrosion protection.
- Control box is conveniently located with all controls factory wired.
- Large removable panels provide service access.
- Base section and cabinet panels exposed to conditioned air are lined with thick fiberglass insulation.
- Flanged supply and return air openings.
- Electrical inlets furnished for entry into the cabinet.
- Evaporator coil drain pan constructed of painted, corrosion resistant galvanized steel with galvanized pipe drain outlet.
- Lifting brackets factory installed.

Refrigeration System
- All models include: expansion valve, liquid line strainer, suction and liquid line service gauge ports, high pressure switch (manual reset) and full refrigerant charge.
- Freezestat prevents coil freeze-up during low ambient operation or loss of air flow.
- Low ambient operation down to -1°C (30°F).

NOTE - Due to Lennox' ongoing committment to quality, Specifications, Ratings and Dimensions subject to change without notice and without incurring liability.
Improper installation, adjustment, alteration, service or maintenance can cause property damage or personal injury.
Installation and service must be performed by a qualified installer and servicing agency.

FEATURES - CONTINUED

Compressor
- Designed for dependable efficiency with minimum operating cost.
- Suction cooled and overload protected with internal pressure relief.
- Hermetically sealed with built-in protection from excessive current and temperatures.
- Immersible self-regulating, crankcase heater assures proper compressor lubrication (-024 models).
- Running gear assembly resiliently suspended internally inside case. Compressor installed in unit on resilient rubber mounts assuring low sound and vibration free operation.
- Scroll compressor furnished with -036-060 models.
- Reciprocating compressor furnished with -024 models.

Condenser Fan
- Direct drive fan moves large air volumes uniformly through entire condenser coil for high refrigerant cooling capacity.
- Vertical air discharge keeps air up and away from building.
- Permanently lubricated, permanent split capacitor (PSC) motor.
- Motor totally enclosed for maximum protection from weather, dust and corrosion.
- Corrosion resistant polyvinyl chloride (PVC) coated steel wire fan guard is furnished as standard.

Copper Tube/Enhanced Fin Coil
- Lennox designed and fabricated coil.
- Ripple-edged aluminum fins.
- Long life copper tubing for ease of field servicing.
- Enhanced tubing for improved efficiency.
- Lanced fins provide maximum exposure of fin surface to air stream resulting in excellent heat transfer.
- Fin collars grip tubing for maximum contact area.
- Flared shoulder tubing connections/silver soldering construction.
- Coil is factory tested under high pressure to insure leakproof construction.

Blower
- Multi-speed direct drive blowers.
- Each blower assembly statically and dynamically balanced.
- Multiple-speed permanent split capacitor (PSC) motor resiliently mounted.
- Blower speeds are easily changed on the blower motor.
- See blower performance tables.

Air Filter
- Washable or vacuum cleanable 25mm (one inch) thick polyurethane frame type air filter.
- Filter rack is furnished for field installation in down-flow applications.
- Filter rack will accept up to 51mm (two inch) thick filter.
- Filters must be field installed in return air duct for horizontal applications without economizer.
- See dimension drawings.

Economizer Wiring
- Furnished and factory installed.
- Economizer wiring harness with jack plug connections.
- See page 3 for economizer options.

Unit Testing
- Rated test conditions are those included in Air Conditioning and Refrigeration Institute (ARI) Standard 210/240 while operating at rated voltage and air volumes.
- Sound numbers rated at test conditions included in Air Conditioning and Refrigeration Institute (ARI) Standard 270.
- Units and components are bonded for grounding to meet safety standards for servicing required by Underwriter's Laboratories (UL) and the International Electrotechnical Commission (IEC).
- Blower data is from unit tests conducted in the Lennox Laboratory air test chamber.
- Developed in accordance with ISO 9002 quality standards.

OPTIONAL ACCESSORIES - MUST BE ORDERED EXTRA

Model Number		CHA16-024	CHA16-036	CHA16-048	CHA16-060
Ceiling Diffusers - Aluminum grilles, large center grille, insulated diffuser box with flanges, hanging rings furnished, interior transition (even air flow), internally sealed (prevents recirculation), adapts to T-bar ceiling grids or plaster ceilings - Net Weight	**Step-Down -** double deflection louvers	RTD9-65 - 30 kg (67 lbs.))			
	Flush - fixed blade louvers	FD9-65 - 17 kg (37 lbs.))			
Ceiling Diffuser Transitions (Supply and Return) — Used with diffusers, installs in roof mounting frame, galvanized steel construction, flanges furnished for duct connection, fully insulated - Net Weight		SRT16 - 20 lbs.) (9 kg)			
Coil Guards - Polyvinyl Chloride (PVC) coated steel wire guards to protect outdoor coil.		LB-82199CF (**47J23**) 2 guards per order		LB-82199CG (**47J24**) 3 guards per order	
Control Systems - See pages 4-5 for complete listing.		See pages 4-5			
Economizer with Gravity Exhaust Dampers (Down-Flow) - Installs directly in cabinet, recirculated air dampers with pressure operated gravity exhaust damper, formed, gasketed damper blades, nylon bearings, 24v damper motor has adjustable minimum position switch, electronic discharge air sensor, adjustable outdoor air enthalpy control. Utilizes filter furnished with unit, filter rack will accept up to 51 mm (2 in.) filter. Removable exhaust air hood and outdoor air intake hood with cleanable aluminum mesh filter. Choice of economizer controls. Model Number - Net Weight - Number and size of filter - mm (in.)	3 position	REMD16-41 - 22 kg (48 lbs.)		REMD16-65 - 30 kg (66 lbs.)	
	Fully modulating	REMD16M-41 - 22 kg (48 lbs.)		REMD16M-65 - 30 kg (66 lbs.)	
	[1] Indoor Filter	(1) 406 x 635 x 25 (16 x 25 x 1)		(1) 508 x 635 x 25 (20 x 25 x 1)	
	Outdoor Filter	(1) 356 x 635 x 25 (14 x 25 x 1)		(1) 457 x 635 x 25 (18 x 25 x 1)	

Continued On Next Page ▶

OPTIONAL ACCESSORIES - MUST BE ORDERED EXTRA

Model Number		CHA16-024	CHA16-036	CHA16-048	CHA16-060
Economizer Dampers (Horizontal) - Installs directly in cabinet, combination outdoor air and recirculated air damper, formed, gasketed damper blades, nylon bearings, 24v damper motor has adjustable minimum position switch, electronic discharge air sensor, adjustable outdoor air enthalpy control. 25 mm (1 in.) fiberglass filter furnished, filter rack will accept up to 51 mm (2 in.) filter, outdoor air intake hood with aluminum mesh filter. Choice of economizer controls. Model Number - Net Weight - Number and size of filter - mm (in.)	3 position	EMDH16-41 - 50 kg (110 lbs.)		EMDH16-65 - 59 kg (130 lbs.)	
	Fully modulating	EMDH16M-41 - 50 kg (110 lbs.)		EMDH16M-65 - 59 kg (130 lbs.)	
	Indoor Filter	(1) 508 x 610 x 25 (20 x 24 x 1)		(1) 406 x 635 x 25 (16 x 25 x 1) (1) 356 x 635 x 25 (14 x 25 x 1)	
	Outdoor Filter	(1) 203 x 610 x 25 (8 x 24 x 1)		(1) 203 x 711 x 25 (8 x 28 x 1)	
Economizer Differential Enthalpy Control - Used in conjunction with outdoor air enthalpy control. Determines and selects which air has the lowest enthalpy. Return air enthalpy sensor field installs in economizer damper section		**54G44**			
Economizer Gravity Exhaust Dampers (Horizontal) - For use with EMDH16. Pressure operated assembly field installs in the return air duct adjacent to the economizer assembly. Includes bird screen. - Net Weight		GEDH16-65 - 2 kg (4 lbs.)			
Electric Heat - Field installed, helix wound nichrome elements, time delay for element staging, individual element limit controls, wiring harness, may be two-stage controlled. **ECH16R** - Supplemental thermal cutoff safety fuses and thermal relay sequencer. **ECH16** - Supplemental secondary limits, heating control relay, fuse block and galvanized steel control box.		See Electric Heat Data Tables Pages 8-11			
Electric Heat Single Point Power Source Sub-Fuse Box - Use with ECH16R electric heaters, use in conjunction with ECH16 fuse box for single point power source applications, installs internal to unit, fuses furnished, constructed of galvanized steel with prepunched mounting holes		See Electric Heat Data Tables, Pages 8-11			
Hail Guards - Heavy duty field installed guards protect coil from damage. Not used with Coil Guards.		**90N90**		**90N91**	
Low Ambient Control Kit - Units operate down to -1°C (30°F) outdoor air temperature in cooling mode without any additional controls. A Low Ambient Kit can be field installed, enabling unit to operate properly down to -17.7°C (0°F).		LB-57113BC **(24H77)**			
Outdoor Air Damper Section - For down-flow applications, damper assembly replaces blower access panel, manually adjustable, 0 to 25% (fixed) outdoor air, outdoor air hood with cleanable filter included, number and size of filter - Net Weight		OAD16-41 - 5 kg (12 lbs.) (1) 127 x 432 x 25 mm (5 x 17 x 1 in.)		OAD16-65 - 5 kg (12 lbs.) (1) 203 x 432 x 25 mm (8 x 17 x 1 in.)	
Outdoor Air Damper Section - For horizontal applications, installs in return air duct adjacent to unit, manually adjustable (fixed) outdoor air - Net Weight		OAD3-46/65 - 4 kg (8 lbs.)			
Outdoor Thermostat Kit - Used to lock out some of the electric heating elements on indoor units where two stage control is applicable. Outdoor thermostat maintains the heating load on the low power input as long as possible before allowing the full power load to come on line	Thermostat Kit	LB-29740BA (**56A87**)			
	Mounting Box	M-1595 (**31461**)			
Roof Curb Power Entry Kit - Allows power entry through roof mounting frame, knockouts provided in roof frame, kit contains 40 in. (1016 mm) armored conduit and installation hardware, two kits are required, one for 24V and one for high voltage. See Dimension Drawing	13 mm (1/2 in.)	**18H70**			
	26 mm (1 in.)	**18H71**			
	39 mm (1-1/2 in.)	**18H72**			
Roof Mounting Frame - Nailer strip furnished, mates to unit, U.S. National Roofing Contractors Approved, shipped knocked down. RMF16-41 may be used on all sizes, with a slight unit overhang on CHA16-048 and CHA16-060 units - Net Weight NOTE - Sound Reduction Plate must be ordered separately for field installation.		RMF16-41 - 35 kg (75 lbs.) **(97G59)** Plate (ordered separately) (**73H80**)		RMF16-41 - 35 kg (75 lbs.) **(97G59)** Plate (ordered separately) (**73H80**) RMF16-65 - 39 kg (86 lbs.) **(97G60)** Plate (ordered separately) (**73H82**)	
Timed Off Control — Prevents compressor short-cycling and allows time for suction and discharge pressure to equalize, permitting the compressor to start in an unloaded condition. Automatic reset control provides a time delay between compressor shutoff and start-up.		LB-50709BK **(47J27)**			
Unit Single Point Power Source Sub Fuse Box - Installs internal to unit, provides sub-fusing to the unit, used in conjunction with ECH16 or ECH16R for single point power source applications, fuses furnished, constructed of galvanized steel with prepunched mounting holes and electrical inlet and outlet holes, hinged box cover		See Electric Heat Data Tables, Pages 8-11			
Unit Stand-Off Mounting Kit — Elevates horizontal application units above mounting surface. Includes six high impact polystyrene stand-off mounts. See dimension drawings.		**38H18**			

1 **Indoor filter is not furnished with economizer. REMD16 utilizes existing filter furnished with CHA16 unit.**

OPTIONAL CONVENTIONAL TEMPERATURE CONTROL SYSTEMS (FIELD INSTALLED)

System and Component Description	Catalog Number
ELECTRO-MECHANICAL THERMOSTAT	
Thermostat — Two stage heat & two stage cool with dual temperature levers, subbase choice	**13F06**
Subbase — Manual system switch (Off-Heat-Auto-Cool), fan switch (Auto-On)	**13F17**
Status Panel — May be ordered extra	**See Page 5 for Selection**
Night Setback Operation — Order components below	—
Thermostat — One stage heat & one stage cool	**12F99**
Subbase — Non-switching	**13F16**
Time Clock — 7 day operation, indicates day and night periods, 2 hour increments, battery back-up	**See Price Book for Selection**
Time Clock — 24 hour night setback operation, 15 minute increments, battery back-up	**See Price Book for Selection**
HONEYWELL T7300 THERMOSTAT	
Thermostat — Programmable, internal or optional remote temperature sensing (sensor required), touch sensitive keyboard, automatic switching, °F or °C readout, no anticipator, droop/no droop selection, indicator LED's, hour/day programming, override capabilities, time and operational mode readout, stage status indicators, battery back-up, subbase choice, manual system switch (Heat-Off-Auto-Cool), fan switch (Auto-On)	**37L54**
Subbase — Selectable staging, indicator LED's, auxiliary relay output for economizer operation — Up to two stage heat & two stage cool	**37L55**
Subbase — Selectable staging, indicator LED's, auxiliary relay output for economizer operation — Up to three stage heat & three stage cool	**37L53**
Sensor — Room temperature	**58C92**
Sensor — Room temperature with 3 hour override and setpoint adjustment	**86G67**
Sensor — Return air temperature	**27C40**
Status Panel — May be ordered extra	**See Page 5 for Selection**
HONEYWELL T8600/T8624 THERMOSTAT	
Thermostat — Programmable, touch sensitive keypad, automatic heat/cool switching, °F or °C readout, indicator LED's, four temperature settings per daily schedule, override capabilities, time and operational mode readout, battery back-up (batteries included)	—
T8600 Thermostat — 1 heat/1 cool, 7 day programming, wiring wall plate included	T8600D (**37L59**)
T8624 Thermostat — 2 heat/2 cool, 7 day programming, switching subbase included	T8624D (**37L61**)
Status Panel — May be ordered extra	**See Below for Selection**
STATUS PANEL/SWITCHING STATUS PANEL	
SP11 Status Panel — Allows remote monitoring of unit through status lights, requires Status Panel Readout Kit **Status Light** / **Definition** Cool Mode — Green — Cooling operation Heat Mode — Green — Heating operation Compressor 1 — Green — Compressor operation Red — Compressor malfunction Compressor 2 — Not used No Heat — Red — Requires service Filter — Red — Requires service	**12F83**
Status Panel Readout Kit — Required to interface SP11 to unit operation	**14F92**
Filter Switch Kit — Required with Filter light option on SP11	**97C85**
Current Sensing Relay — For operation of No Heat light with electric heat on SP11	**29F79**

CONVENTIONAL COMMERCIAL TEMPERATURE CONTROL SELECTION FLOWCHARTS

ELECTRO-MECHANICAL THERMOSTAT

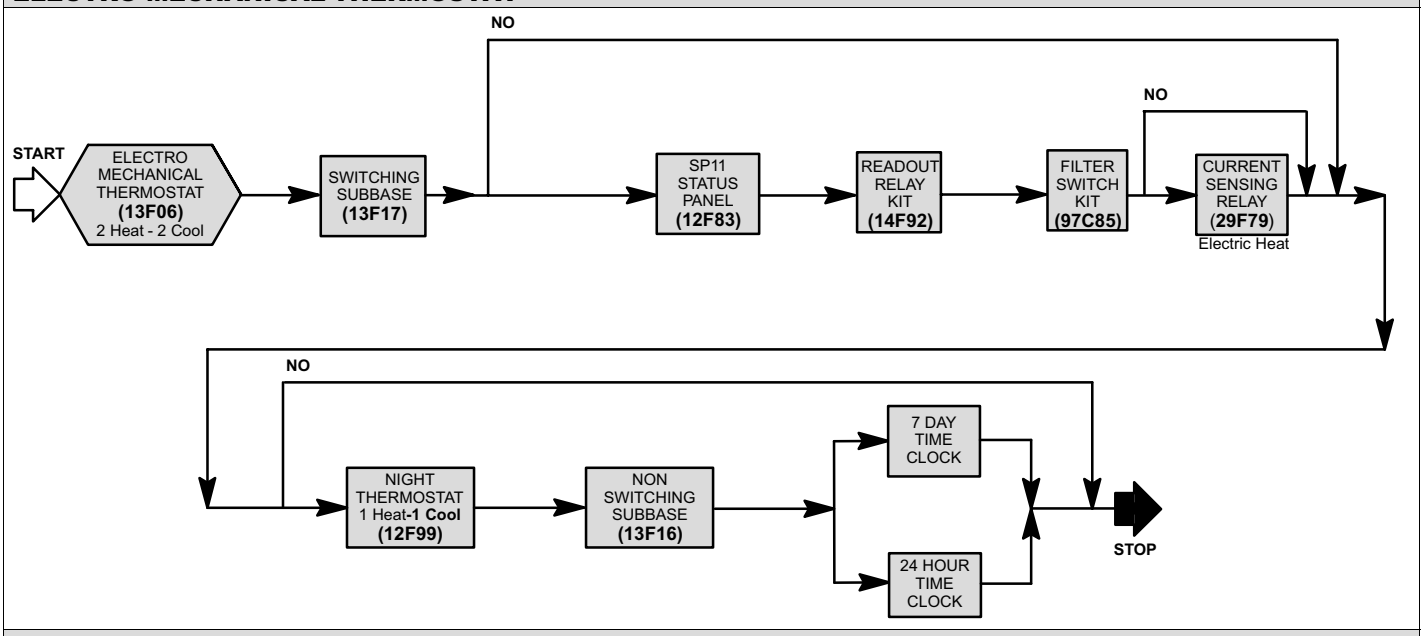

HONEYWELL T7300 THERMOSTAT

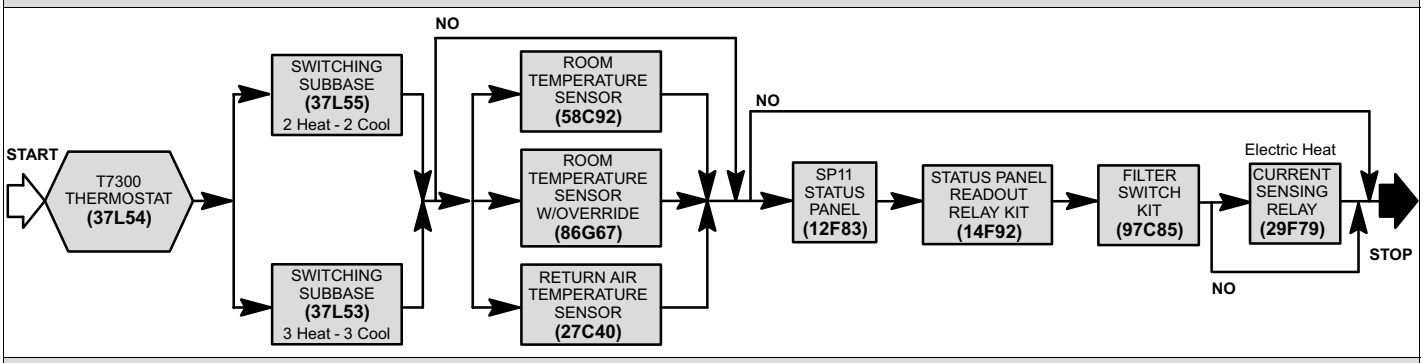

HONEYWELL T8600/T8624 THERMOSTAT

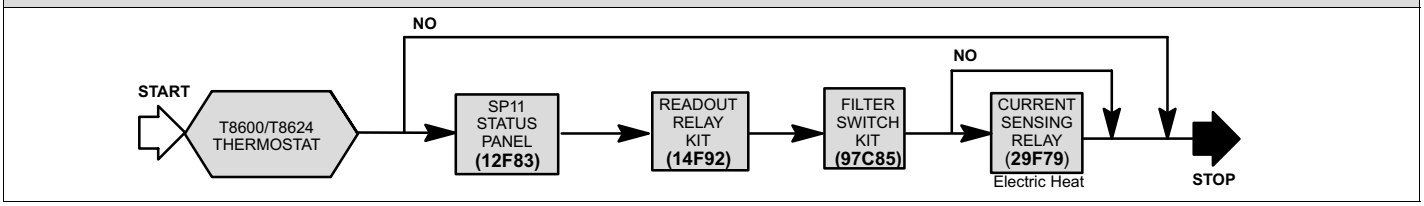

FIELD WIRING

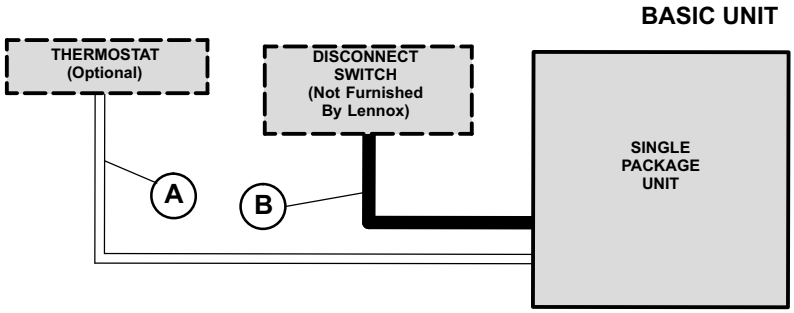

A — *Four Wire 24V (Electro-mechanical)

— *Five Wire 24V (Electronic)

B — Single or Three Phase with neutral

(See Electrical Data Table)

— Field Wiring Not Furnished —

**When economizer with two stage thermostat is used, one additional wire is required*

NOTE - All wiring must conform to local electrical codes.

FIELD WIRING

ELECTRO-MECHANICAL THERMOSTAT CONTROL SYSTEM

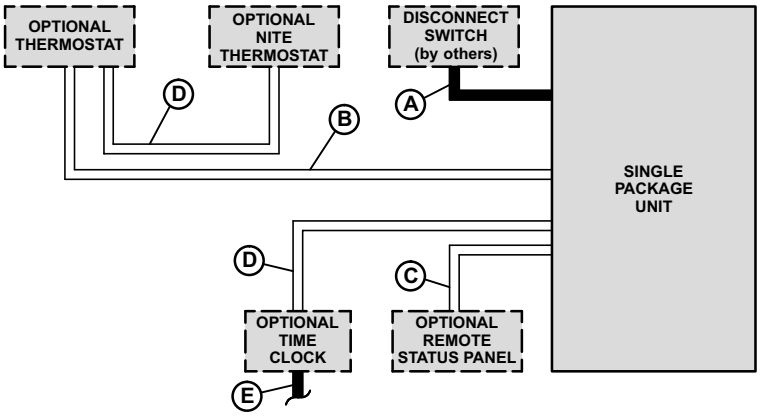

A - Single or Three Phase with neutral (See Electrical Data Table)
B - Six wire 24V
C - Nine wire 24V
D - Two wire 24V
E - Two wire 24V

- Field wiring not furnished -

NOTE - All wiring must conform to local electrical codes.

T7300/T8600/T8624 THERMOSTAT CONTROL SYSTEM

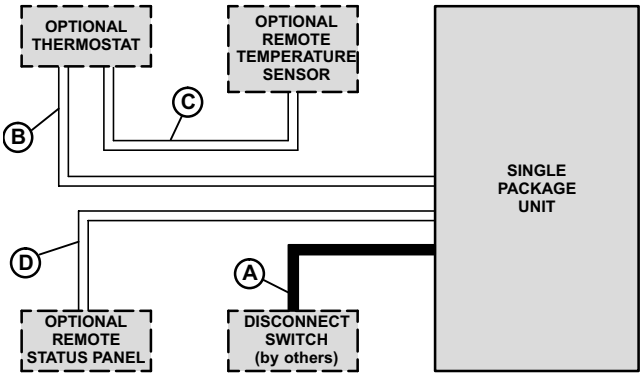

A - Single or Three Phase with neutral (See Electrical Data Table)
B - Nine wire 24V
C - Two wire 24V
- Seven wire 24V (T7300 Room Sensor with override)
D - Nine wire 24V (T7300 with optional override sensor)
- Seven wire 24V (T8624)
- Four wire 24V (T8600)

- Field wiring not furnished -

NOTE - All wiring must conform to local electrical codes.

ELECTRICAL DATA

Model Number		CHA16-024	CHA16-036	CHA16-048	CHA16-060
Line voltage data (50hz)		220/240v 1 phase	380/420v 3 phase with neutral		
Recommended maximum fuse size (amps)		25	15	15	20
†Minimum Circuit Ampacity		17	12	13	15
Compressor	Rated load (A)	9.6	6.2	6.4	8.0
	Locked rotor (A)	58	39	48	60
Condenser Coil Fan Motor (1 phase)	Full load (A)	1.4	1.4	1.1	1.1
	Locked rotor (A)	2.9	2.9	2.0	2.0
Evaporator Blower Motor	Full load (A)	2.9	2.8	3.4	3.4
	Locked rotor (A)	4.7	8.3	7.8	7.8

†Refer to local electrical codes to determine wire, fuse and disconnect size requirements. Use wires suitable for at least 75°C (167°F).

SPECIFICATIONS

Model Number			CHA16-024	CHA16-036	CHA16-048	CHA16-060
Nominal KW (Tons)			7.0 (2)	10.5 (3)	14.0 (4)	17.5 (5)
Cooling Ratings	Total cooling capacity - kW (Btuh)		5.6 (19 200)	9.4 (32 000)	12.0 (41 000)	14.8 (50 500)
	Total power input - kW		2.1	3.7	4.5	5.3
	Coefficient of performance - Output/Input		2.6	2.5	2.7	2.8
	Energy Efficiency Ratio (Btuh/Watts)		9.0	8.6	9.2	9.6
*Sound Rating Number (db)			80		82	
Refrigerant Charge (HCFC-22)			1.45 kg (3 lbs. 3 oz.)	2.18 kg (4 lbs. 13 oz.)	2.49 kg (5 lbs. 8 oz.)	3.37 kg (7 lbs. 7 oz.)
Evaporator Blower	Blower wheel nominal diameter x width - mm (in.)		229 x 203 (9 x 8)	254 x 178 (10 x 7)	254 x 203 (10 x 8)	292 x 229 (11-1/2 x 9)
	Motor output - W (hp)		249 (1/3)	373 (1/2)		
Evaporator Coil	Net face area - m^2 ($ft.^2$)		0.30 (3.2)	0.38 (4.1)	0.54 (5.8)	
	Tube outside diameter - mm (in.) & Number of rows		9.5 (3/8) - 2			
	Fins per m (inch)		591 (15)	669 (17)	591 (15)	
Condenser Coil	Net face area m^2 ($ft.^2$)	Outer coil	0.80 (8.6)		1.33 (14.3)	
		Inner coil	- - - -	0.78 (8.4)	0.55 (5.9)	1.28 (13.8)
	Tube outside diameter - mm (in.) & Number of rows		9.5 (3/8) - 1	9.5 (3/8) - 2	9.5 (3/8) - 1.4	9.5 (3/8) - 2
	Fins per m (inch)		787 (20)			
Condenser Fan	Diameter - mm (in.) & Number of blades		508 (20) - 4		610 (24) - 4	
	Air volume - L/s (cfm)		1030 (2180)	945 (2000)	1415 (3000)	
	Motor output - W (hp)		149 (1/5)		187 (1/4)	
	Total motor input - W		190	200	285	
Condensate drain size male pipe thread - in.			3/4			
Number and size of cleanable polyurethane filters - mm (in.)			(1) 406 x 635 x 25 (16 x 25 x 1)		(1) 508 x 635 x 25 (20 x 25 x 1)	
Net weight of basic unit - kg (lbs.)			136 (300)	145 (320)	199 (438)	215 (473)
Shipping weight of basic unit - kg (lbs.) 1 package			175 (385)	185 (407)	248 (547)	264 (582)
Electrical characteristics - (50hz)			220/240v - 1 phase	380/420v - 3 phase		

*Sound Rating Numbers rated at test conditions for Air Conditioning and Refrigeration Institute (ARI) Standard 270.

★The rating test conditions are those that are in accordance with the Unitary Small Equipment certification program, which is based on Air Conditioning and Refrigeration Institute (ARI) Standard 210/240 while operating at rated voltages and conditions; 35°C (95°F) outdoor air temperature and 27°C (80°F) db/ 19°C (67°F) wb entering evaporator coil air.

ELECTRIC HEAT DATA

Single Package Unit Model Number	Electric Heater Model Number and Net Weight	Number of Steps and Phase	Volts Input	Heater Only †Minimum Circuit Ampacity	Electric Heat kW Input	Electric Heat Btuh Input	Optional Single Point Power Source Boxes		Total Unit & Electric Heat †Minimum Circuit Ampacity
							Heater Sub-Fuse Box	Unit Sub-Fuse Box	
CHA16-024	ECH16R-5 220/240v **(34H46)** 4 kg (9 lbs.)	1 step 1 phase	220	24	4.2	14 300	ECH16R-26/41-5 220/240v **(34H26)**	ECH16-261 220/240v **(31H10)**	28
			230	25	4.6	15 700			29
			240	26	5.0	17 100			30
	ECH16R-7 220/240v **(34H47)** 2 kg (5 lbs.)		220	34	5.9	20 100	ECH16R-26/65-7 220/240v **(34H25)**		37
			230	35	6.4	21 800			39
			240	37	7.0	23 900			41
	ECH16R-10 220/240v **(34H48)** 2 kg (5 lbs.)		220	48	8.4	28 700	ECH16R-26/65-10 220/240v **(34H24)**		52
			230	50	9.2	34 100			54
			240	53	10.0	34 100			56
	ECH16R-15 220/240v **(31H27)** 8 kg (18 lbs.)		220	72	12.6	43 000	- - - -		76
			230	75	13.8	47 100			79
			240	79	15.0	51 200			82
CHA16-036	ECH16-7 380/420v **(31H36)** 8 kg (17 lbs.)	1 step (3 phase)	380	9	4.4	15 000	- - - -	ECH16-413 380/420v **(31H18)**	12
			400	9	4.9	16 600			13
			420	10	5.4	18 300			13
	ECH16-10 380/420v **(31H37)** 8 kg (17 lbs.)		380	12	6.3	21 400			16
			400	13	6.9	23 700			17
			420	14	7.7	26 200			17
	ECH16-15 380/420v **(31H38)** 8 kg (17 lbs.)		380	18	9.4	32 100			22
			400	19	10.4	35 600			23
			420	20	11.5	39 200			24
	ECH16-20 380/420v **(31H39)** 9 kg (20 lbs.)		380	24	12.5	42 800			28
			400	25	13.9	47 400			29
			420	27	15.3	52 300			30
CHA16-048	ECH16-7 380/420v **(31H36)** 8 kg (17 lbs.)	1 step (3 phase)	380	9	4.4	15 000	- - - -	ECH16-413/513 380/420v **(31H21)**	13
			400	9	4.9	16 600			14
			420	10	5.4	18 300			14
	ECH16-10 380/420v **(31H37)** 8 kg (17 lbs.)		380	12	6.3	21 400			17
			400	13	6.9	23 700			17
			420	14	7.7	26 200			18
	ECH16-15 380/420v **(31H38)** 8 kg (17 lbs.)		380	18	9.4	32 100			23
			400	19	10.4	35 600			24
			420	20	11.5	39 200			24
	ECH16-20 380/420v **(31H44)** 9 kg (20 lbs.)		380	24	12.5	42 800			28
			400	25	13.9	47 400			30
			420	27	15.3	52 300			31
	ECH16-25 380/420v **(31H40)** 9 kg (20 lbs.)		380	30	15.6	53 400			35
			400	32	17.4	59 300			36
			420	33	19.2	65 400			38
CHA16-060	ECH16-7 380/420v **(31H36)** 8 kg (17 lbs.)	1 step (3 phase)	380	9	4.4	15 000	- - - -	ECH16-513/653 380/420v **(31H19)**	13
			400	9	4.9	16 600			14
			420	10	5.4	18 300			14
	ECH16-10 380/420v **(31H37)** 8 kg (17 lbs.)		380	12	6.3	21 400			17
			400	13	6.9	23 700			17
			420	14	7.7	26 200			18
	ECH16-15 380/420v **(31H38)** 8 kg (17 lbs.)		380	18	9.4	32 100			23
			400	19	10.4	35 600			24
			420	20	11.5	39 200			24
	ECH16-20 380/420v **(31H44)** 9 kg (20 lbs.)		380	24	12.5	42 800			28
			400	25	13.9	47 400			30
			420	27	15.3	52 300			31
	ECH16-25 380/420v **(31H40)** 9 kg (20 lbs.)		380	30	15.6	53 400			35
			400	32	17.4	59 300			36
			420	33	19.2	65 400			38

†Refer to local electrical codes to determine wire, fuse and disconnect size requirements. Use wires suitable for at least 75°C (167°F).

COOLING RATINGS

NOTE - For Temperatures and Capacities not shown in tables, see bulletin — Cooling Unit Rating Table Correction Factor Data in Miscellaneous Engineering Data section.

CHA16-024 COOLING CAPACITY - 50HZ

Entering Wet Bulb Temperature	Total Air Volume		Outdoor Air Temperature Entering Outdoor Coil																								
			27°C (80°F)						35°C (95°F)						43°C (110°F)						52°C (125°F)					
			Total Cooling Capacity		Comp Motor kW Input	Sensible To Total Ratio (S/T) Dry Bulb			Total Cooling Capacity		Comp Motor kW Input	Sensible To Total Ratio (S/T) Dry Bulb			Total Cooling Capacity		Comp Motor kW Input	Sensible To Total Ratio (S/T) Dry Bulb			Total Cooling Capacity		Comp Motor kW Input	Sensible To Total Ratio (S/T) Dry Bulb		
	m³/s	cfm	kW	kBtuh		24°C 75°F	27°C 80°F	29°C 85°F	kW	kBtuh		24°C 75°F	27°C 80°F	29°C 85°F	kW	kBtuh		24°C 75°F	27°C 80°F	29°C 85°F	kW	kBtuh		24°C 75°F	27°C 80°F	29°C 85°F
17°C (63°F)	.30	640	5.9	20.0	1.36	.74	.89	1.00	5.4	18.5	1.55	.77	.93	1.00	5.0	17.1	1.74	.80	.96	1.00	4.6	15.7	1.92	.83	.99	1.00
	.38	800	6.1	20.8	1.37	.80	.96	1.00	5.7	19.4	1.57	.83	.99	1.00	5.3	18.0	1.77	.87	1.00	1.00	4.9	16.6	1.96	.92	1.00	1.00
	.45	960	6.3	21.6	1.38	.85	1.00	1.00	5.9	20.2	1.59	.89	1.00	1.00	5.5	18.8	1.80	.93	1.00	1.00	5.1	17.4	2.00	.97	1.00	1.00
19°C (67°F)	.30	640	6.2	21.3	1.38	.57	.71	.85	5.8	19.8	1.58	.59	.74	.89	5.3	18.2	1.78	.61	.77	.93	4.8	16.5	1.96	.63	.81	.97
	.38	800	6.4	22.0	1.39	.61	.77	.93	6.0	20.4	1.59	.63	.80	.97	5.5	18.7	1.80	.65	.84	.99	5.0	17.1	1.99	.68	.89	1.00
	.45	960	6.6	22.5	1.39	.64	.83	.99	6.1	20.8	1.61	.66	.87	1.00	5.6	19.2	1.81	.69	.91	1.00	5.1	17.5	2.01	.73	.96	1.00
22°C (71°F)	.30	640	6.7	22.9	1.40	.42	.56	.69	6.2	21.2	1.62	.43	.57	.71	5.7	19.6	1.82	.43	.59	.74	5.2	17.9	2.02	.44	.61	.78
	.38	800	6.9	23.6	1.41	.44	.59	.75	6.4	21.9	1.63	.44	.61	.78	5.9	20.1	1.84	.45	.63	.82	5.4	18.3	2.04	.47	.66	.86
	.45	960	7.0	24.0	1.42	.45	.63	.80	6.5	22.3	1.64	.46	.65	.84	6.0	20.4	1.85	.47	.68	.88	5.5	18.6	2.05	.48	.72	.93

CHA16-036 COOLING CAPACITY - 50HZ

Entering Wet Bulb Temperature	Total Air Volume		Outdoor Air Temperature Entering Outdoor Coil																								
			27°C (80°F)						35°C (95°F)						43°C (110°F)						52°C (125°F)					
			Total Cooling Capacity		Comp Motor kW Input	Sensible To Total Ratio (S/T) Dry Bulb			Total Cooling Capacity		Comp Motor kW Input	Sensible To Total Ratio (S/T) Dry Bulb			Total Cooling Capacity		Comp Motor kW Input	Sensible To Total Ratio (S/T) Dry Bulb			Total Cooling Capacity		Comp Motor kW Input	Sensible To Total Ratio (S/T) Dry Bulb		
	m³/s	cfm	kW	kBtuh		24°C 75°F	27°C 80°F	29°C 85°F	kW	kBtuh		24°C 75°F	27°C 80°F	29°C 85°F	kW	kBtuh		24°C 75°F	27°C 80°F	29°C 85°F	kW	kBtuh		24°C 75°F	27°C 80°F	29°C 85°F
17°C (63°F)	.49	1050	9.8	33.6	2.35	.74	.90	1.00	9.4	32.0	2.77	.76	.92	1.00	8.9	30.3	3.27	.78	.95	1.00	8.4	28.5	3.89	.80	.97	1.00
	.56	1200	10.1	34.4	2.37	.77	.94	1.00	9.6	32.7	2.78	.79	.96	1.00	9.1	31.0	3.29	.82	.99	1.00	8.6	29.2	3.91	.85	1.00	1.00
	.63	1350	10.3	35.1	2.38	.81	.97	1.00	9.8	33.4	2.79	.83	.99	1.00	9.3	31.7	3.30	.86	1.00	1.00	8.8	30.0	3.93	.89	1.00	1.00
19°C (67°F)	.49	1050	10.4	35.5	2.38	.57	.72	.86	9.9	33.7	2.80	.58	.73	.89	9.3	31.8	3.31	.59	.75	.91	8.7	29.8	3.93	.61	.78	.95
	.56	1200	10.6	36.1	2.39	.59	.75	.91	10.1	34.3	2.81	.60	.77	.94	9.5	32.3	3.32	.62	.80	.96	8.9	30.3	3.94	.63	.83	.99
	.63	1350	10.7	36.6	2.40	.61	.79	.95	10.2	34.7	2.82	.63	.81	.97	9.6	32.8	3.33	.64	.84	.99	9.0	30.7	3.95	.66	.87	1.00
22°C (71°F)	.49	1050	11.1	37.8	2.42	.42	.56	.69	10.5	35.9	2.84	.42	.57	.71	9.9	33.9	3.35	.43	.58	.73	9.3	31.8	3.98	.43	.60	.76
	.56	1200	11.2	38.3	2.43	.43	.58	.73	10.7	36.4	2.85	.43	.59	.75	10.1	34.4	3.36	.44	.61	.77	9.4	32.2	4.00	.44	.62	.80
	.63	1350	11.4	38.8	2.43	.44	.60	.76	10.8	36.8	2.86	.44	.62	.79	10.2	34.7	3.37	.45	.64	.82	9.5	32.5	4.00	.46	.65	.85

CHA16-048 COOLING CAPACITY - 50HZ

Entering Wet Bulb Temperature	Total Air Volume		Outdoor Air Temperature Entering Outdoor Coil																								
			27°C (80°F)						35°C (95°F)						43°C (110°F)						52°C (125°F)					
			Total Cooling Capacity		Comp Motor kW Input	Sensible To Total Ratio (S/T) Dry Bulb			Total Cooling Capacity		Comp Motor kW Input	Sensible To Total Ratio (S/T) Dry Bulb			Total Cooling Capacity		Comp Motor kW Input	Sensible To Total Ratio (S/T) Dry Bulb			Total Cooling Capacity		Comp Motor kW Input	Sensible To Total Ratio (S/T) Dry Bulb		
	m³/s	cfm	kW	kBtuh		24°C 75°F	27°C 80°F	29°C 85°F	kW	kBtuh		24°C 75°F	27°C 80°F	29°C 85°F	kW	kBtuh		24°C 75°F	27°C 80°F	29°C 85°F	kW	kBtuh		24°C 75°F	27°C 80°F	29°C 85°F
17°C (63°F)	.60	1280	12.4	42.2	2.90	.72	.86	.98	11.8	40.2	3.40	.74	.89	1.00	11.1	37.9	4.02	.75	.91	1.00	10.4	35.4	4.79	.78	.94	1.00
	.75	1600	12.8	43.7	2.92	.77	.93	1.00	12.2	41.6	3.42	.79	.96	1.00	11.5	39.3	4.05	.82	.98	1.00	10.8	36.8	4.83	.85	1.00	1.00
	.90	1920	13.2	45.0	2.94	.83	.98	1.00	12.6	42.9	3.45	.85	1.00	1.00	11.9	40.7	4.08	.88	1.00	1.00	11.2	38.2	4.87	.91	1.00	1.00
19°C (67°F)	.60	1280	13.1	44.7	2.94	.56	.70	.83	12.5	42.5	3.44	.57	.71	.85	11.7	40.0	4.07	.58	.73	.88	10.9	37.3	4.85	.60	.76	.91
	.75	1600	13.5	46.0	2.96	.59	.75	.90	12.8	43.7	3.47	.61	.77	.93	12.0	41.1	4.09	.62	.80	.96	11.2	38.2	4.88	.64	.83	.98
	.90	1920	13.7	46.9	2.98	.63	.81	.96	13.0	44.5	3.49	.64	.83	.98	12.3	41.9	4.11	.66	.86	1.00	11.4	38.9	4.90	.68	.89	1.00
22°C (71°F)	.60	1280	14.0	47.6	2.99	.42	.55	.67	13.2	45.2	3.50	.42	.56	.69	12.5	42.6	4.13	.43	.57	.71	11.6	39.6	4.92	.43	.59	.73
	.75	1600	14.3	48.8	3.01	.43	.58	.73	13.6	46.3	3.53	.44	.59	.75	12.8	43.6	4.16	.44	.61	.78	11.9	40.5	4.94	.45	.63	.81
	.90	1920	14.6	49.7	3.03	.44	.62	.79	13.8	47.1	3.54	.45	.63	.81	13.0	44.3	4.17	.46	.65	.84	12.0	41.1	4.97	.47	.67	.88

CHA16-060 COOLING CAPACITY - 50HZ

Entering Wet Bulb Temperature	Total Air Volume		Outdoor Air Temperature Entering Outdoor Coil																								
			27°C (80°F)						35°C (95°F)						43°C (110°F)						52°C (125°F)					
			Total Cooling Capacity		Comp Motor kW Input	Sensible To Total Ratio (S/T) Dry Bulb			Total Cooling Capacity		Comp Motor kW Input	Sensible To Total Ratio (S/T) Dry Bulb			Total Cooling Capacity		Comp Motor kW Input	Sensible To Total Ratio (S/T) Dry Bulb			Total Cooling Capacity		Comp Motor kW Input	Sensible To Total Ratio (S/T) Dry Bulb		
	m³/s	cfm	kW	kBtuh		24°C 75°F	27°C 80°F	29°C 85°F	kW	kBtuh		24°C 75°F	27°C 80°F	29°C 85°F	kW	kBtuh		24°C 75°F	27°C 80°F	29°C 85°F	kW	kBtuh		24°C 75°F	27°C 80°F	29°C 85°F
17°C (63°F)	.75	1600	15.3	52.3	3.40	.73	.88	.99	14.6	49.7	3.96	.75	.90	1.00	13.8	47.0	4.64	.77	.92	1.00	13.0	44.4	5.45	.79	.95	1.00
	.85	1800	15.6	53.2	3.42	.76	.91	1.00	14.8	50.6	3.98	.78	.94	1.00	14.0	47.9	4.66	.80	.96	1.00	13.3	45.3	5.48	.83	.98	1.00
	.94	2000	15.9	54.1	3.43	.79	.94	1.00	15.1	51.5	4.00	.81	.96	1.00	14.3	48.8	4.68	.83	.98	1.00	13.5	46.1	5.50	.86	1.00	1.00
19°C (67°F)	.75	1600	16.2	55.2	3.45	.57	.71	.85	15.4	52.5	4.02	.58	.73	.87	14.5	49.6	4.70	.59	.74	.90	13.7	46.6	5.53	.60	.77	.92
	.85	1800	16.4	56.0	3.47	.59	.74	.88	15.6	53.2	4.03	.60	.76	.91	14.7	50.2	4.72	.61	.78	.93	13.8	47.2	5.55	.63	.81	.96
	.94	2000	16.6	56.7	3.48	.60	.77	.92	15.8	53.9	4.05	.62	.79	.94	14.9	50.8	4.74	.63	.81	.96	14.0	47.8	5.56	.65	.84	.98
22°C (71°F)	.75	1600	17.2	58.6	3.52	.42	.56	.69	16.4	55.8	4.09	.43	.56	.70	15.4	52.7	4.78	.43	.58	.72	14.5	49.5	5.62	.44	.59	.75
	.85	1800	17.4	59.4	3.54	.43	.57	.72	16.6	56.5	4.11	.43	.58	.73	15.6	53.3	4.80	.44	.60	.76	14.7	50.1	5.64	.45	.62	.78
	.94	2000	17.6	60.0	3.55	.44	.59	.75	16.7	57.1	4.12	.44	.60	.77	15.8	53.8	4.81	.45	.62	.79	14.8	50.6	5.65	.45	.64	.82

BLOWER DATA

CHA16-024 BLOWER PERFORMANCE - 50hz (With Down-Flow Air Openings)

External Static Pressure		Air Volume at Various Blower Speeds					
		High		Medium		Low	
Pa	in. w.g.	L/s	cfm	L/s	cfm	L/s	cfm
0	0.0	700	1490	625	1330	510	1075
10	0.05	695	1475	620	1315	500	1065
25	0.10	690	1465	615	1305	495	1050
35	0.15	685	1450	605	1280	490	1035
50	0.20	670	1425	595	1265	480	1020
60	0.25	665	1410	590	1250	475	1005
75	0.30	660	1400	580	1225	465	990
100	0.40	640	1360	565	1200	450	960
125	0.50	615	1305	540	1150	430	915
150	0.60	600	1265	525	1110	410	870
175	0.70	575	1215	500	1055	390	820
185	0.75	555	1175	480	1015	375	790

NOTE — All air data is measured external to the unit with dry coil and without air filter.

CHA16-024 BLOWER PERFORMANCE - 50hz (With Horizontal Air Openings)

External Static Pressure		Air Volume at Various Blower Speeds					
		High		Medium		Low	
Pa	in. w.g.	L/s	cfm	L/s	cfm	L/s	cfm
0	0.0	660	1395	580	1230	470	1000
10	0.05	650	1380	580	1225	470	995
25	0.10	645	1370	570	1210	465	985
35	0.15	640	1360	565	1200	460	970
50	0.20	635	1345	560	1185	450	950
60	0.25	625	1320	550	1165	445	940
75	0.30	620	1310	545	1160	435	925
100	0.40	600	1275	530	1125	425	900
125	0.50	585	1240	520	1100	405	860
150	0.60	560	1190	495	1050	390	825
175	0.70	545	1155	480	1015	365	775
185	0.75	535	1130	465	980	355	745

NOTE — All air data is measured external to the unit with dry coil and without air filter.

CHA16-036 BLOWER PERFORMANCE — 50 hz (With Down-Flow Air Openings)

External Static Pressure		Air Volume at Various Blower Speeds							
		High		Medium-High		Medium-Low		Low	
Pa	in. w.g.	L/s	cfm	L/s	cfm	L/s	cfm	L/s	cfm
0	0	730	1545	645	1360	565	1195	500	1055
10	0.05	725	1540	640	1355	560	1190	495	1050
25	0.10	715	1515	635	1340	555	1180	490	1035
35	0.15	710	1500	620	1320	550	1160	485	1025
50	0.20	705	1490	615	1310	540	1145	480	1015
60	0.25	690	1465	610	1295	535	1135	475	1005
75	0.30	685	1455	605	1285	530	1125	465	980
100	0.40	670	1415	590	1250	515	1090	450	960
125	0.50	650	1380	575	1215	500	1060	435	925
150	0.60	635	1345	560	1180	485	1025	420	890
175	0.70	615	1305	540	1145	470	995	405	855
185	0.75	605	1285	530	1125	460	975	395	835

NOTE — All air data is measured external to the unit with dry coil and without air filter.

CHA16-036 BLOWER PERFORMANCE — 50 hz (With Horizontal Air Openings)

External Static Pressure		Air Volume at Various Blower Speeds							
		High		Medium-High		Medium-Low		Low	
Pa	in. w.g.	L/s	cfm	L/s	cfm	L/s	cfm	L/s	cfm
0	0	705	1500	615	1305	535	1135	475	1010
10	0.05	705	1490	610	1295	530	1125	470	1000
25	0.10	700	1480	605	1285	530	1120	465	985
35	0.15	690	1460	595	1265	520	1100	460	980
50	0.20	685	1450	590	1255	515	1090	455	965
60	0.25	680	1440	585	1235	510	1085	450	955
75	0.30	670	1420	580	1225	505	1065	445	940
100	0.40	655	1385	565	1200	490	1040	435	920
125	0.50	640	1355	545	1160	480	1015	415	880
150	0.60	620	1315	535	1130	460	980	405	855
175	0.70	600	1275	520	1100	445	945	385	815
185	0.75	590	1255	510	1080	435	925	380	805

NOTE — All air data is measured external to the unit with dry coil and without air filter.

CHA16-048 BLOWER PERFORMANCE - 50 hz (With Horizontal or Down-Flow Air Openings)

External Static Pressure		Air Volume at Various Blower Speeds					
		High		Medium		Low	
Pa	in. w.g.	L/s	cfm	L/s	cfm	L/s	cfm
0	0	845	1790	710	1500	470	1000
25	0.10	820	1740	690	1460	470	1000
50	0.20	790	1670	680	1440	460	980
75	0.30	770	1630	660	1400	450	950
100	0.40	730	1550	640	1360	440	930
125	0.50	690	1460	620	1310	430	910
150	0.60	650	1380	590	1250	420	890
175	0.70	610	1290	560	1190	410	870
185	0.75	560	1190	530	1120	390	830

NOTE — All air data is measured external to the unit with dry coil and without air filter.

CHA16-060 BLOWER PERFORMANCE - 50 hz (With Down-Flow Air Openings)

External Static Pressure		Air Volume at Various Blower Speeds					
		High		Medium		Low	
Pa	in. w.g.	L/s	cfm	L/s	cfm	L/s	cfm
0	0	855	1810	780	1650	695	1470
25	0.10	840	1780	760	1610	680	1440
50	0.20	820	1740	740	1570	670	1420
75	0.30	800	1700	730	1550	660	1400
100	0.40	770	1630	700	1480	640	1360
125	0.50	750	1590	680	1440	630	1340
150	0.60	710	1510	650	1380	610	1290
175	0.70	690	1460	620	1310	590	1250
185	0.75	650	1380	590	1250	570	1210

NOTE — All air data is measured external to the unit with dry coil and without air filter.

CHA16-060 BLOWER PERFORMANCE — 50 hz (With Horizontal Air Openings)

External Static Pressure		Air Volume at Various Blower Speeds					
		High		Medium		Low	
Pa	in. w.g.	L/s	cfm	L/s	cfm	L/s	cfm
0	0	970	2060	860	1840	745	1580
25	0.10	950	2010	850	1800	730	1550
50	0.20	930	1970	830	1760	720	1530
75	0.30	910	1930	810	1720	700	1480
100	0.40	880	1870	780	1650	680	1440
125	0.50	850	1800	750	1590	660	1400
150	0.60	810	1720	720	1530	630	1340
175	0.70	770	1630	690	1460	610	1290
185	0.75	730	1550	650	1380	580	1230

NOTE — All air data is measured external to the unit with dry coil and without air filter.

ACCESSORY BLOWER DATA

FILTER AND ACCESSORY AIR RESISTANCE

Unit Model Number	Air Volume		Total Air Resistance — PA (inches water gauge)					
			25 mm (1 in.) Filter Furnished	REMD16 Down-Flow Economizer			EMDH16 Horizontal Economizer	
	L/s	cfm		Less Filter	With Optional Pleated Polyester 51 mm (2 in.) Filter	With Optional Fiberglass 51 mm (2 in. Filter	With Furnished 25 mm (1 in.) Filter	Less Filter
CHA16-024 CHA16-036	285	600	32 (0.13)	12 (0.05)	52 (0.21)	22 (0.09)	30 (0.12)	17 (0.07)
	380	800	37 (0.15)	12 (0.05)	67 (0.27)	32 (0.13)	45 (0.18)	25 (0.10)
	470	1000	45 (0.18)	15 (0.06)	85 (0.34)	45 (0.18)	65 (0.26)	37 (0.15)
	565	1200	52 (0.21)	22 (0.09)	104 (0.42)	60 (0.24)	87 (0.35)	52 (0.21)
	660	1400	62 (0.25)	37 (0.15)	127 (0.51)	77 (0.31)	114 (0.46)	72 (0.29)
CHA16-048 CHA16-060	755	1600	37 (0.15)	12 (0.05)	99 (0.40)	67 (0.27)	75 (0.30)	42 (0.17)
	850	1800	42 (0.17)	15 (0.06)	119 (0.48)	82 (0.33)	87 (0.35)	47 (0.19)
	945	2000	50 (0.20)	20 (0.08)	139 (0.56)	97 (0.39)	99 (0.40)	55 (0.22)
	1040	2200	57 (0.23)	32 (0.13)	164 (0.66)	114 (0.46)	117 (0.47)	65 (0.26)

DIFFUSER AIR RESISTANCE

Unit Model Number	Air Volume		Total Air Resistance — PA (inches water gauge)			
			RTD9-65 Diffuser			FD9-65 Diffuser
	L/s	cfm	2 Ends Open	1 Side 2 Ends Open	All Ends and Sides Open	
CHA16-024 CHA16-036	285	600	30 (0.12)	27 (0.11)	20 (0.08)	20 (0.08)
	380	800	37 (0.15)	32 (0.13)	27 (0.11)	27 (0.11)
	470	1000	47 (0.19)	40 (0.16)	35 (0.14)	35 (0.14)
	565	1200	62 (0.25)	50 (0.20)	42 (0.17)	42 (0.17)
	660	1400	82 (0.33)	65 (0.26)	50 (0.20)	50 (0.20)
CHA16-048 CHA16-060	755	1600	107 (0.43)	80 (0.32)	50 (0.20)	60 (0.24)
	850	1800	139 (0.56)	90 (0.40)	75 (0.30)	75 (0.30)
	945	2000	182 (0.73)	124 (0.50)	90 (0.36)	90 (0.36)
	1040	2200	236 (0.95)	157 (0.63)	109 (0.44)	109 (0.44)

NOTE - Electric heat has no appreciable air resistance.

CEILING DIFFUSER AIR THROW DATA

Model Number		RTD9-65		FD9-65	
Air Volume		[1] Effective Throw			
L/s	cfm	m	ft.	m	ft.
470	1000	3-5	10-17	5-6	15-20
565	1200	3-5	11-18	5-7	16-22
660	1400	4-6	12-19	5-7	17-24
755	1600	4-6	12-20	5-8	18-25
850	1800	4-6	13-21	6-9	20-28
945	2000	4-7	14-23	6-9	21-29
1040	2200	5-8	16-25	7-9	22-30

[1] Effective throw based on terminal velocities of 23 m (75 ft.) per minute.

WET INDOOR COIL AIR RESISTANCE

Model Number	Air Volume		Air Resistance	
	L/s	cfm	Pa	in. w.g.
CHA16-024	385	600	12	0.05
	380	800	15	0.06
	470	1000	17	0.07
	565	1200	20	0.08
CHA16-036	380	800	22	0.09
	470	1000	25	0.10
	565	1200	27	0.11
	660	1400	30	0.12
CHA16-048	755	1600	27	0.11
	850	1800	30	0.12
	945	2000	32	0.13
	1040	2200	35	0.14
CHA16-060	755	1600	20	0.08
	850	1800	22	0.09
	945	2000	25	0.10
	1040	2200	27	0.11

GUIDE SPECIFICATIONS

General
- *Furnish and install a single package combination air to air direct expansion mechanical cooling system, complete with automatic controls.*
- *The single package unit shall be a standard product of a firm regularly engaged in the manufacture of heating-cooling equipment.*
- *The manufacturer shall test operate system at the factory before shipment.*

Air Distribution
- *Equipment shall be capable of bottom (down-flow) or side (horizontal) handling of conditioned air.*

Refrigeration System
- *The coils shall be non-ferrous construction with aluminum fins mechanically bonded to durable copper tubes. Coils shall be pressure leak tested.*
- *Outdoor coil shall be formed coil construction. Optional coil guards shall be available.*
- *Compressors shall be resiliently mounted and have overload protection. -036-048-060 models shall have scroll compressors. -024 models shall have reciprocating compressors and crankcase heaters. The refrigeration system shall have discharge, suction and liquid line service gauge ports, freezestat, high pressure switch, liquid line strainer, expansion valve and full refrigerant charge.*
- *Control options available shall consist of low ambient controls, timed-off control and thermostat.*

Cabinet
- *Shall be galvanized steel with a powdered enamel paint finish electrostatically bonded to the metal.*
- *Cabinet panels where conditioned air is handled shall be fully insulated to prevent sweating and minimize sound. Openings shall be provided for power connection entry.*
- *Supply and return air openings shall be flanged.*
- *Indoor coil condensate drain shall be provided.*
- *Lifting brackets shall be factory installed.*

Economizer Wiring
- *Economizer wiring harness shall be furnished and factory installed.*

Service Access
- *All components, wiring and inspection areas shall be completely accessible through removable panels.*

Supply Air Blowers
- *Centrifugal supply air blower shall be direct driven by a multi-speed motor.*
- *Blower shall be statically and dynamically balanced.*

Outdoor Coil Fans
- *Direct drive propeller type condenser fans shall discharge vertically.*
- *Fan motor shall be permanently lubricated and inherently protected.*
- *Fans shall have a safety guard.*

Air Filters
- *Cleanable 25 mm (1 inch) thick filters shall be furnished.*

OPTIONAL ACCESSORIES

Ceiling Diffusers
- *Furnish and install a (flush or stepdown) optional combination ceiling supply and return air diffuser.*

Ceiling Diffuser Supply and Return Air Transitions
- *Supply and return transitions shall be available, for field installation in the roof mounting frame, to facilitate duct connection to the diffuser.*

Coil Guards
- *Shall be available for field installation.*
- *Guards shall protect coil from damage.*

Control Systems
- *Shall provide a selection of thermostats and related controls to automatically operate the mechanical equipment through the heating or cooling and ventilating cycles as required.*

Electric Heaters
- *Shall be available for field installation.*
- *Heating elements shall be nichrome bare wire exposed directly to the air stream.*
- *ECH16R safety devices shall consist of limit controls and thermal cutoff safety fuses. ECH16 safety devices shall consist of limit controls and fuse block.*
- *Optional heater sub-fuse box shall be available for ECH16R electric heaters for single point power supply applications.*

Economizer Dampers
- *Furnish and install, complete with controls, an air mixing damper assembly including outdoor air and recirculated air dampers.*
- *The assembly shall provide for the introduction of outside air for minimum ventilation and free cooling.*
- *Damper motor shall be 24 volt fully modulating or three position spring return.*
- *Down-flow model shall include pressure operated gravity exhaust dampers.*
- *Controls shall include electronic discharge air sensor, minimum position switch, and solid-state adjustable enthalpy control.*
- *Control option available shall consist of differential enthalpy control (return air sensor).*

Economizer Horizontal Gravity Exhaust Dampers (for Horizontal Economizer)
- *Pressure operated dampers shall install in return air duct for horizontal applications with EMDH16.*
- *Damper blades shall ride in nylon bearings and be gasketed for tight seal and quiet operation.*

Hail Guards
- *Shall be available for field installation.*
- *Guards shall protect coil from damage.*

Outdoor Air Damper Section
- *Optional manual outdoor dampers shall be available to provide outdoor air requirements of up to 25%.*
- *Damper section field installs external to the unit.*
- *Shall be equipped with outdoor air hood filter for extra air filtering and bird screen protection.*

Remote Status Panel
- *Shall be available for installation within the conditioned area to observe equipment operation.*
- *The panel shall include signal lights for Cool Mode, Heat Mode, Compressor 1, Compressor 2, No Heat and Filter.*

Roof Curb Power Entry Kit
- *Optional kit shall provide power entry to the unit through the roof mounting frame.*

Roof Mounting Frame
- *Mechanical contractor shall install a steel roof mounting frame for bottom discharge and return air duct connection.*
- *It shall mate to the bottom perimeter of the equipment.*
- *When flashed into the roof it shall make a unit mounting curb and provide weatherproof duct connection and entry into the conditioned area.*
- *Flashing shall be the responsibility of a roofing contractor.*

Stand-Off Mounting Kit
- *Optional kit shall be available to elevate unit above mounting surface in horizontal applications.*

Unit Single Point Power Source Unit Sub-Fuse Box
- *Optional box shall field install internal to the unit and provide single point power source connection and sub-fusing for unit.*
- *Shall be of galvanized steel with mounting holes, electrical inlets and hinged cover.*

DIMENSIONS - MM (INCHES)

BASIC UNIT

CORNER WEIGHTS

Model Number	AA		BB		CC		DD	
	kg	lbs.	kg	lbs.	kg	lbs.	kg	lbs.
CHA16-024	27	60	29	64	41	91	39	85
CHA16-036	29	64	31	68	44	97	41	91
CHA16-048	39	85	42	91	61	135	57	126
CHA16-060	42	92	45	99	66	146	62	136

CENTER OF GRAVITY

Model Number	EE		FF	
	mm	inch	mm	inch
CHA16-024 CHA16-036	737	29	686	27
CHA16-048 CHA16-060	889	35	787	31

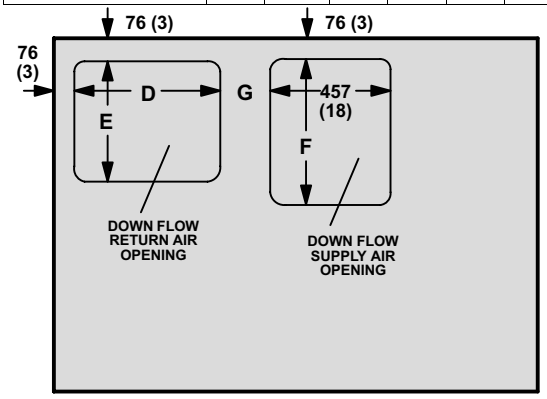

TOP VIEW BASE SECTION

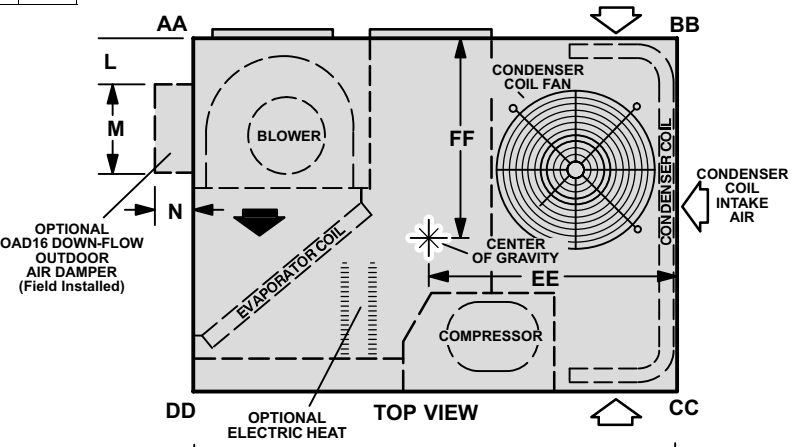

TOP VIEW

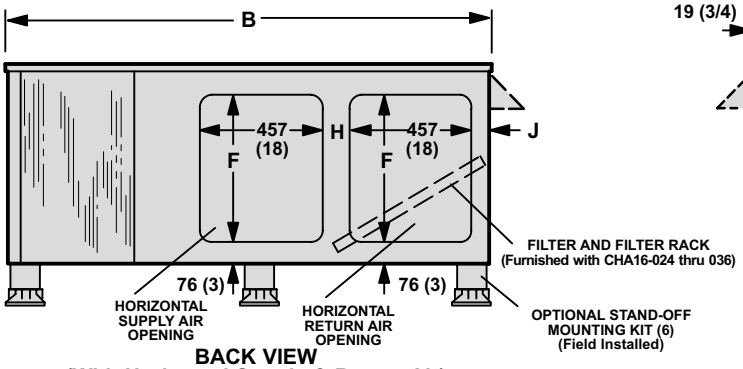

BACK VIEW
(With Horizontal Supply & Return Air)

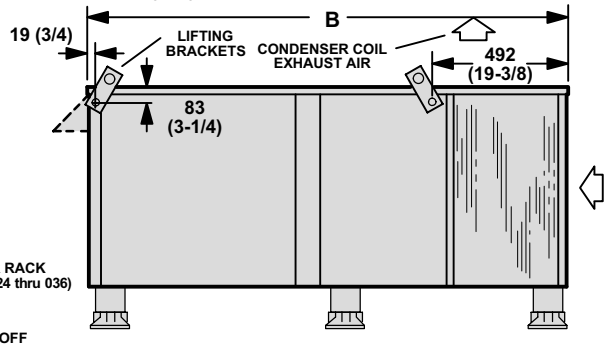

FRONT VIEW

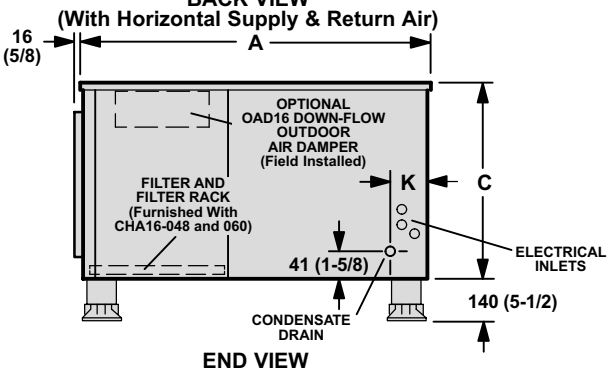

END VIEW

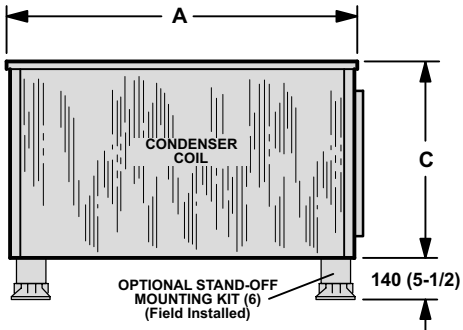

END VIEW

Model Number	A		B		C		D		E		F		G	
	mm	inch	mm	inch	mm	inch	mm	inch	mm	inch	mm	inch	mm	inch
CHA16-024 CHA16-036	1168	46	1524	60	584	23	457	18	330	13	330	13	254	10
CHA16-048 CHA16-060	1321	52	1842	72-1/2	737	29	559	22	457	18	559	22	191	7-1/2

Model Number	H		J		K		L		M		N	
	mm	inch	mm	inch	mm	inch	mm	inch	mm	inch	mm	inch
CHA16-024 CHA16-036	76	3	102	4	165	6-1/2	51	2	349	13-3/4	127	5
CHA16-048 CHA16-060	127	5	76	3	156	6-1/8	127	5	349	13-3/4	203	8

ACCESSORY DIMENSIONS - MM (INCHES)

CHA16 UNIT WITH REMD16 ECONOMIZER DAMPER SECTION AND RMF16 ROOF MOUNTING FRAME

CORNER WEIGHTS

Model Number	AA		BB		CC		DD	
	kg	lbs.	kg	lbs.	kg	lbs.	kg	lbs.
CHA16-024	46	102	55	121	49	108	42	92
CHA16-036	49	107	57	126	52	113	44	96
CHA16-048	66	145	78	171	67	148	57	126
CHA16-060	70	154	82	181	71	157	60	133

CENTER OF GRAVITY

Model Number	EE		FF	
	mm	inch	mm	inch
CHA16-024 CHA16-036	699	27-1/2	552	21-3/4
CHA16-048 CHA16-060	845	33-1/4	613	24-1/8

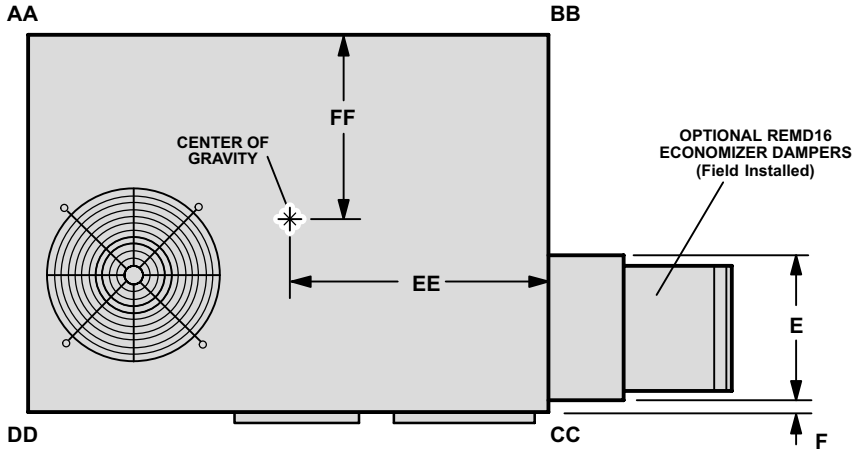

TOP VIEW

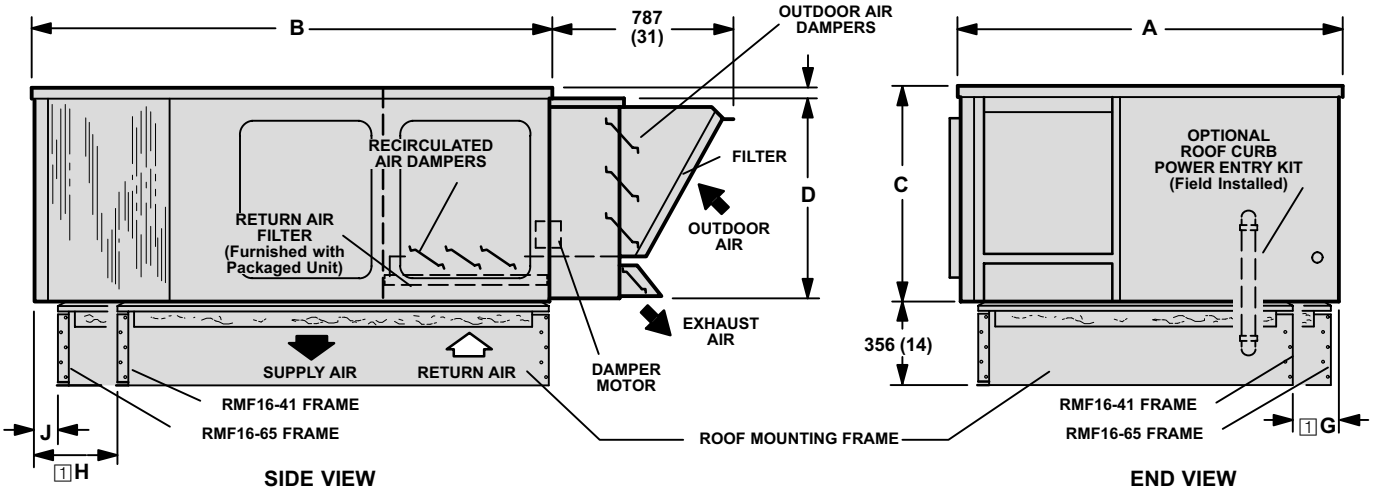

SIDE VIEW

END VIEW

Model Number	A		B		C		D		E		F		1 G		1 H		J	
	mm	inch	mm	inch	mm	inch	mm	inch	mm	inch	mm	inch	mm	inch	mm	inch	mm	inch
CHA16-024 CHA16-036	1168	46	1524	60	584	23	552	21-3/4	413	16-1/4	19	3/4	- - -	- - -	- - -	- - -	- - -	- - -
CHA16-048 CHA16-060	1321	52	1842	72-1/2	737	29	705	27-3/4	519	20-7/16	38	1-1/2	178	7	406	16	89	3-1/2

1 Dimensions reflect usage with RMF16-41 mounting frame.

ACCESSORY DIMENSIONS - MM (INCHES)

CHA16 UNIT WITH EMDH16 HORIZONTAL ECONOMIZER DAMPER SECTION AND GEDH16-65 GRAVITY EXHAUST DAMPERS

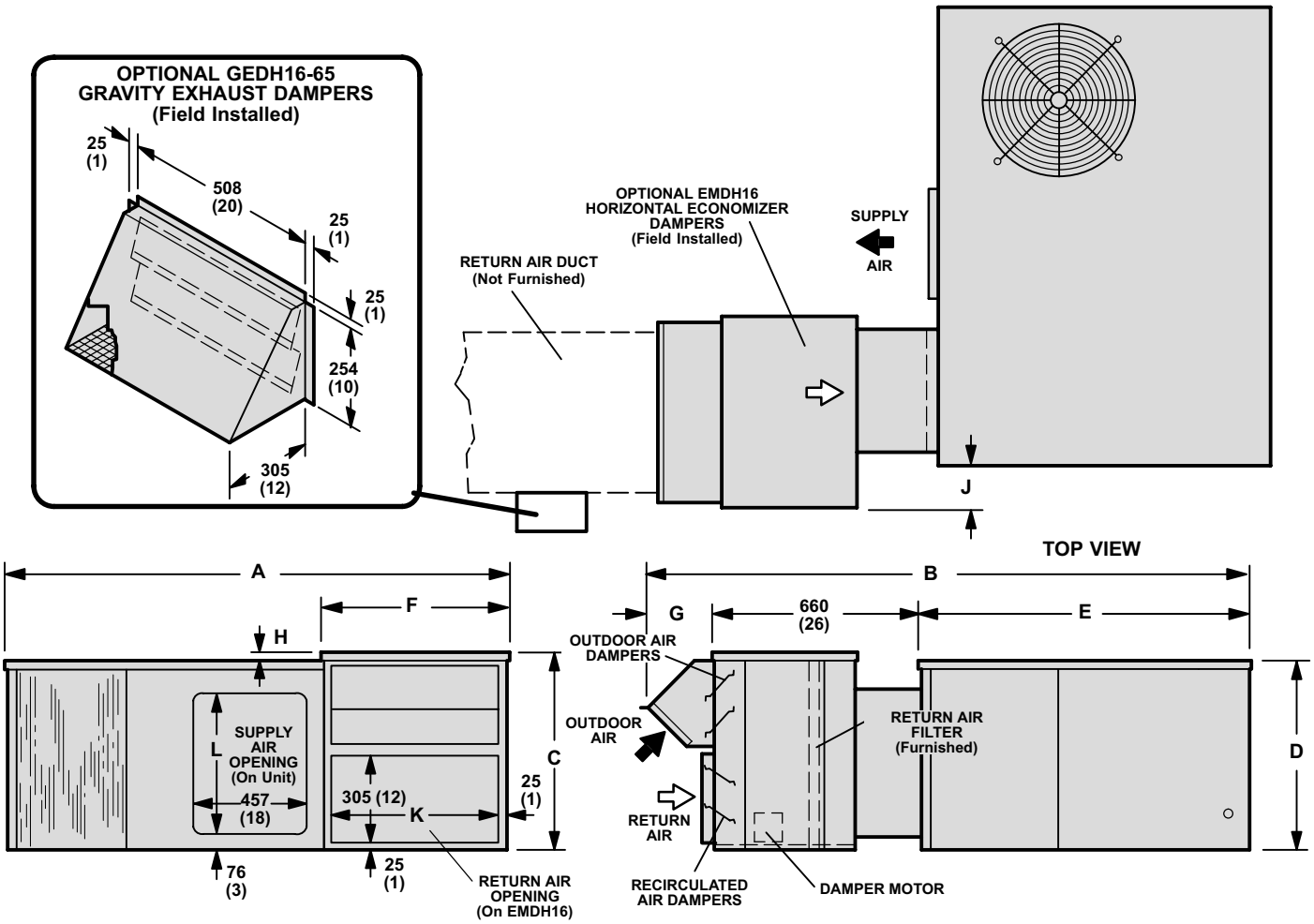

Model Number	A		B		C		D		E		F		G		H		J		K		L	
	mm	inch	mm	inch	mm	inch	mm	inch	mm	inch	mm	inch	mm	inch	mm	inch	mm	inch	mm	inch	mm	inch
CHA16-024 CHA16-036	1600	63	2070	81-1/2	660	26	584	23	1168	46	660	26	241	9-1/2	76	3	76	3	610	24	330	13
CHA16-048 CHA16-060	2019	79-1/2	8100	90	772	30-3/8	737	29	1321	52	775	30-1/2	305	12	38	1-1/2	178	7	733	28-7/8	559	22

OAD3-46/65 MANUAL MINIMUM OUTDOOR AIR DAMPER

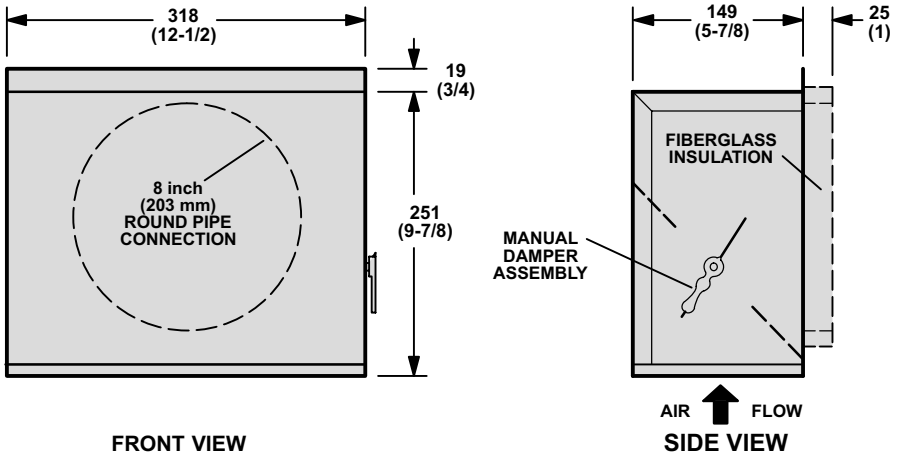

ACCESSORY DIMENSIONS - MM (INCHES)

RMF16-41 & RMF16-65 ROOF MOUNTING FRAME WITH DOUBLE DUCT OPENING FOR CHA16 UNITS

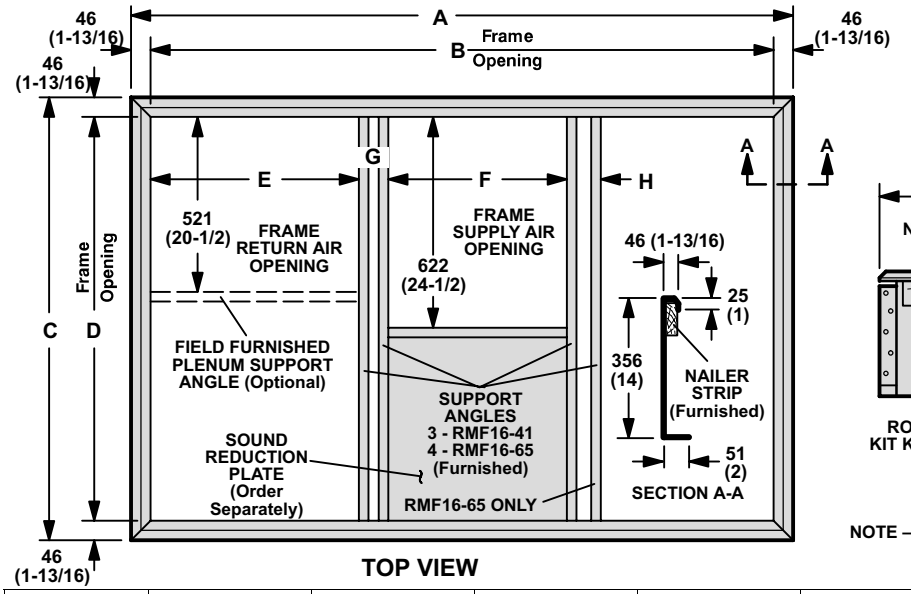

TOP VIEW

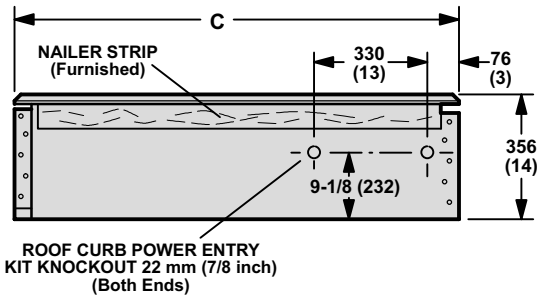

END VIEW

NOTE — Roof deck may be omitted within confines of frame.

Model Number	A		B		C		D		E		F		G		H	
	mm	inch	mm	inch	mm	inch	mm	inch	mm	inch	mm	inch	mm	inch	mm	inch
RMF16-41	1432	56-3/8	1340	52-3/4	1121	44-1/8	1029	40-1/2	619	24-3/8	522	20-9/16	102	[1]4	- - - -	- - - -
RMF16-65	1753	69	1661	65-3/8	1283	50-1/2	1191	46-7/8	616	24-1/4	521	20-1/2	102	4	102	4

[1]83 mm (3-1/4 inches) for CHA16-024-036.

RMF16-41 & RMF16-65 ROOF MOUNTING FRAMES WITH SRT16-65 SUPPLY AND RETURN AIR TRANSITIONS FOR FD9-65 & RTD9-65 CEILING DIFFUSERS

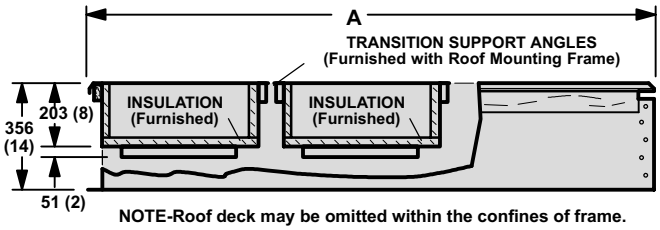

NOTE-Roof deck may be omitted within the confines of frame.

SIDE VIEW

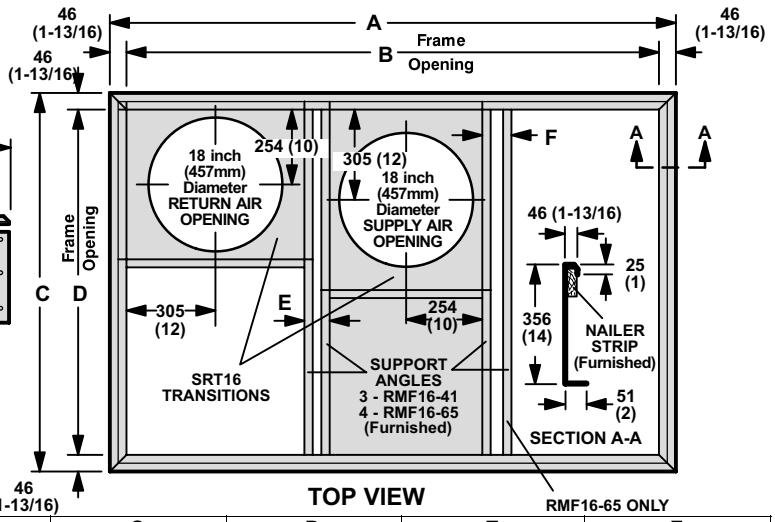

TOP VIEW

Model Number	A		B		C		D		E		F	
	mm	inch	mm	inch	mm	inch	mm	inch	mm	inch	mm	inch
RMF16-41 With SRT16-65	1432	56-3/8	1340	52-3/4	1121	44-1/8	1029	40-1/2	102	[1]4	- - - -	- - - -
RMF16-65 With SRT16-65	1753	69	1661	65-3/8	1283	50-1/2	1191	46-7/8	102	4	102	4

[1]83 mm (3-1/4 inches) for CHA16-024-036.

TYPICAL FLASHING DETAIL FOR RMF16 ROOF MOUNTING FRAME

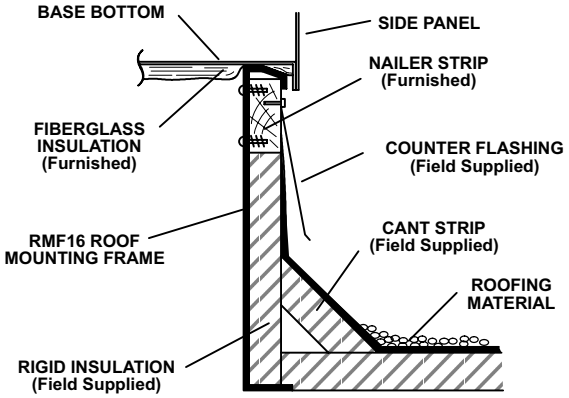

ACCESSORY DIMENSIONS - MM (INCHES)

COMBINATION CEILING SUPPLY AND RETURN DIFFUSERS

RTD9-65 STEP-DOWN CEILING DIFFUSER

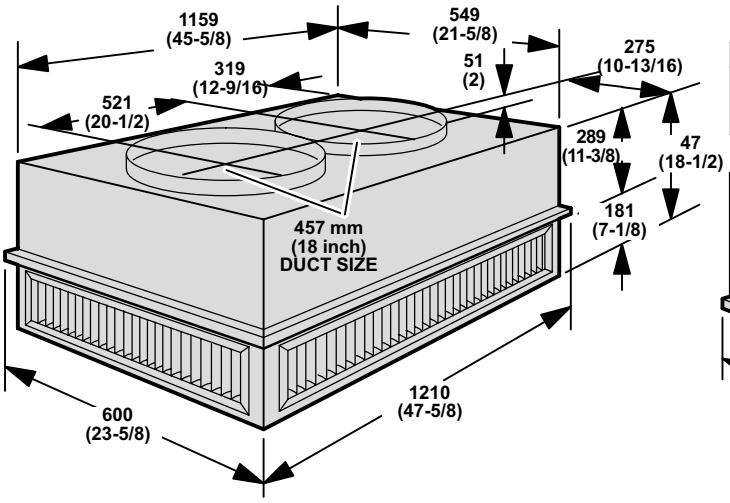

FD9-65 FLUSH CEILING DIFFUSER

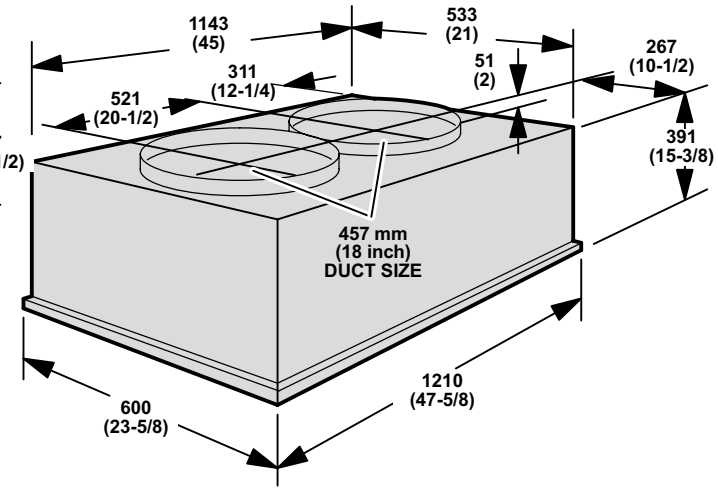

INSTALLATION CLEARANCES - MM (INCHES)

CHA16 BASIC UNIT

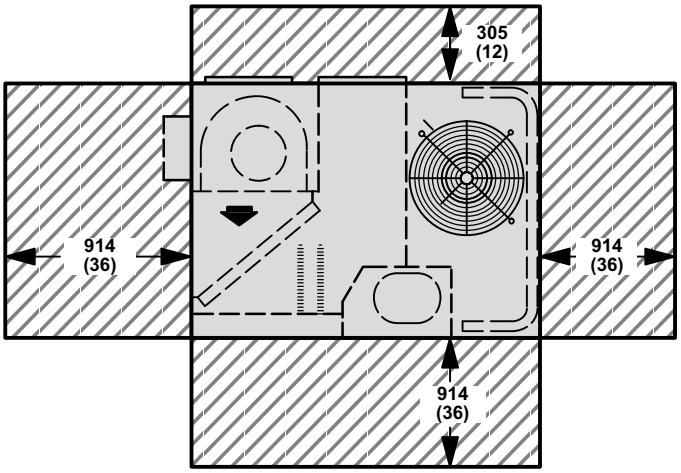

NOTE — Top Clearance 1525 mm (60 in.).
NOTE — Entire perimeter of unit requires support when elevated above mounting surface.

CHA16 UNIT WITH REMD16 ECONOMIZER

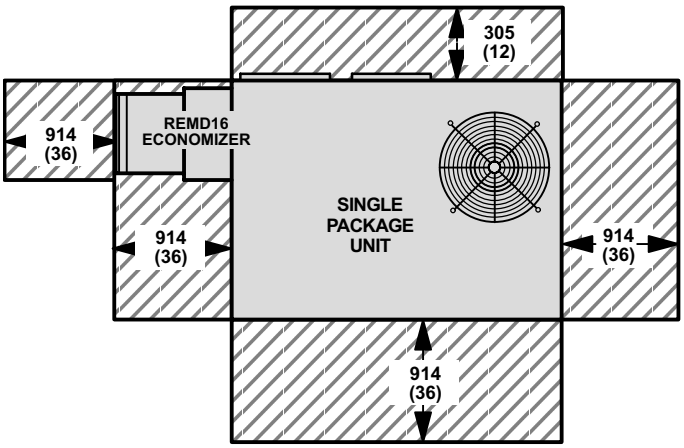

NOTE — Top Clearance 1525 mm (60 in.).

CHA16 UNIT WITH EMD16H ECONOMIZER AND GEDH16-65 GRAVITY EXHAUST DAMPER

NOTE — Top Clearance 1525 mm (60 in).