CODICE	DESCRIZIONE	POS.	GR.
276288B	REMOTE CONTROL	1	
596415A	INTERNA AIR VOLUTE	2	
282282A82	BODY	3	
282283A82	SCREW COVER	4	
05M0076	MOTOR	5	
276305A	LED BOARD	6	
282269A138	DISPLAY COVER	7	
282242A138	LEFT COVER	8	
593009A	BRAND PLATE	9	
242528A	COMPRESSOR WASHER+NUT	10	G0287A
271968A	GOLDSTAR COMPRESSOR COVER GASKET	10	G0287A
272134A	COMPRESSOR INSULATING	10	G0287A
275024A	GK094PAA GOLDSTAR COMPRESSOR	10	G0287A
277582A	GOLDSTAR KLIXON COVER	10	G0287A
276295A	MRA12130-12026 GOLD KLIXON	11	G0287A
03M0024NN17	SUPPORT MICRO	12	G0211A
03M0073NN07	RUBBER PAD SUPPORT	12	G0211A-G0276A
03M0074NN11	RUBBER PAD	12	G0211A-G0276A
03M0278GS33	FLOAT DRIVE	12	G0211A
07M0252	CAB129 EXTENDS WIRING	12	G0211A
09S0384	DRAIN ACTUATOR	12	G0211A-G0276A
275998A	MICROSWITCH 83161.527	12	G0211A
275999A	MICRO LEVER	12	G0211A
05M0194	DRAIN PIPE	13	
02M0296	PVC PIPE	14	G0308A
281692B72	CONDENSATE DISTRIBUTOR	14	G0308A
23M0075	R4E250 RADIAL FAN MOTOR	15	
276382A	CAPACITOR 4 mF	16	
591929A24H	ELECTRONIC BOARD ASSEMBLY	17	
23M0114	R4E200 CENTRIFUGAL FAN MOTOR	18	
03M0045GS33	EVAPORATING FAN PLUG	19	
282284A138	INSIDE AIR FILTER	21	
255546A70	POWER CABLE	23	
276309A	30 MF CAPACITOR	24	
281995A138	AIR GRILL	25	
255771A	PROBE ROOM	26	
255772A	INTERNAL COIL PROBE	27	
255773A	ESTERNAL COIL PROBE	28	
596412A	ESTERNAL GRILL ASSY	29	
15M0006	WALL BRACKET	30	
273772A	TUBE INSULATOR	31	G0307A
596418A	WATER DRAIN	31	
256435A	EVAPORATING COIL	32	
256413A	CONDENSER COIL	33	
282246A138	FRONT FLAP	34	
282247A138	BACK FLAP	35	
593550A	OUTLET TUBE ASSY	37	
282222A135	INSIDE FLANGE FOR WALL	38	
242201A	CHAIN 2MT D.1,5	40	
242200A	EXTERNAL GRILL SPRING	41	
271978A	FILTER PUMP	43	
03M0279KK32	RADIAL FAN HOLDER	44	G0244A
21M0061	FAN INSULATOR	44	G0244A
21M0062	FAN INSULATOR	44	G0244A
21M0110	RIGHT INSULATOR	44	G0244A
21M0111	LEFT INSULATOR	44	G0244A
21M0113	UPPER INSULATOR	44	G0244A
593008A	INSIDE DISPLAY LED	45	
276243A	FOUR WAYS VALVE	46	
598862A	FOUR WAYS VALVE ACTUATOR	47	
276454A	ELECTRONIC BOARD	48	
212787A	RING FOR TUBE	78	
282014A	TUBE O.D.160-L=500	80	

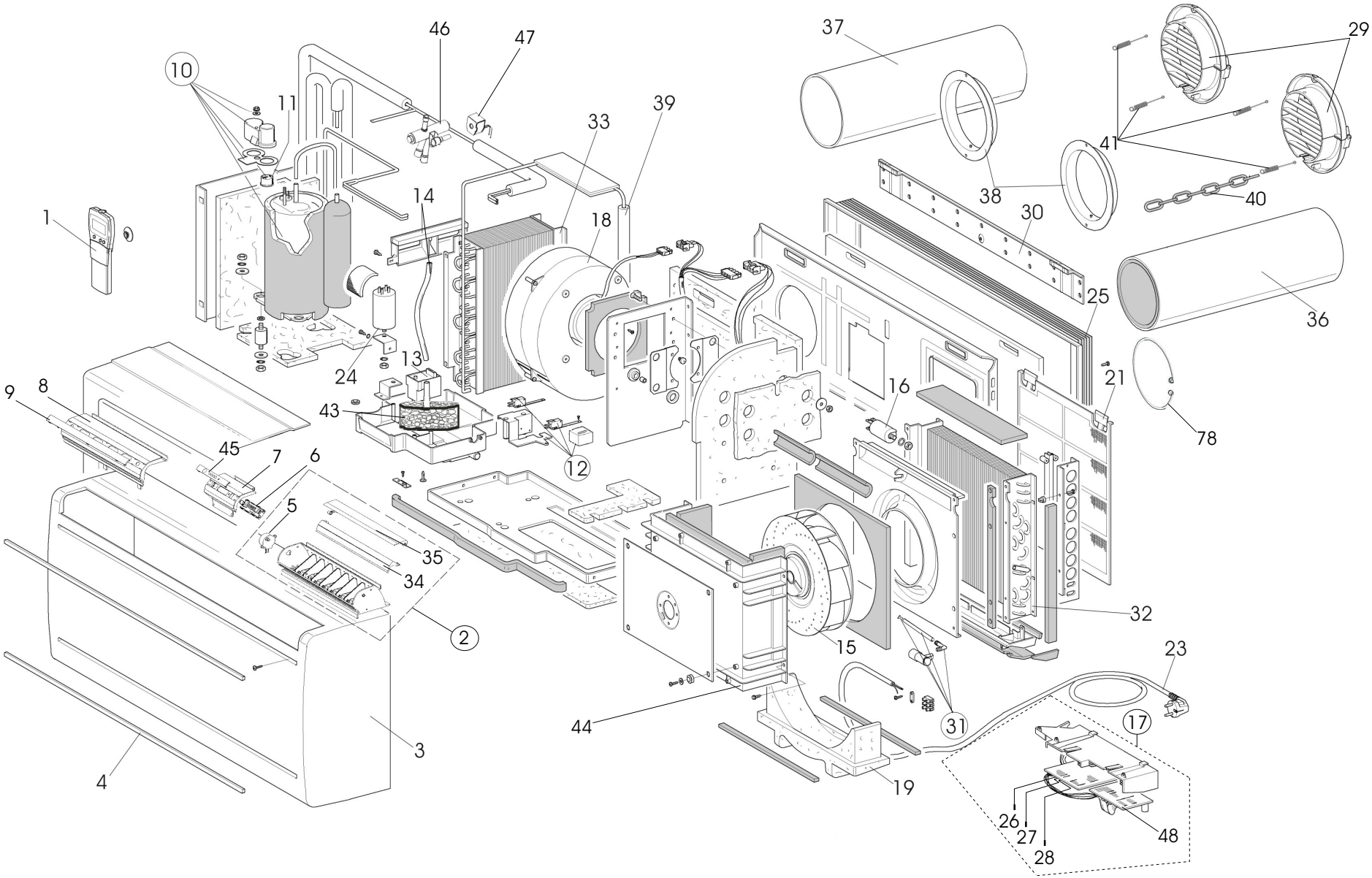

OLIMPIA SPLENDID
Via G. Rossa 1-3
Gualtieri (R.E.)

UNICO star HP

Agg. Settembre 2006 - RIF: 787.00