Technical Data Manual

System 4

Level 5/15

ENVIRONMENTAL CONTROL

Liebert

Keeping Business in Business

LPN: SLE S4A TDM D.0
HPN: 272028_1 (27/11/99)

List of Contents

Nomenclature

System nomenclature

L D 20 A

System type:
A = Air cooled
W = Water cooled
G = Glycol cooled
E = Glycool cooled
C = Chilled water

Model number:
Nominal capacity in kW at 24°C, 50% RH

Air pattern:
D = Downflow
U = Upflow

Liebert System 4 Unit

L	D		46		A	
	Air pattern		**Model size**		**System type**	
Liebert	D	Downflow	20	20kW nominal capacity	A	Air cooled
	U	Upflow	30	30kW nominal capacity	W	Water cooled
			37	37kW nominal capacity	G	Glycol cooled
			40	40kW nominal capacity	E	Glycool cooled
			46	46kW nominal capacity	C	Chilled water
			50	50kW nominal capacity		
			58	58kW nominal capacity		
			60	60kW nominal capacity		
			67	67kW nominal capacity		
			70	70kW nominal capacity		
			80	80kW nominal capacity		
			90	90kW nominal capacity		
			99	99kW nominal capacity		

AIR	WATER	GLYCOL	GLYCOOL	CHILLED WATER
LD/LU 20A	LD/LU 20W	LD/LU 20G	LD/LU 20E	LD/LU 30C
LD/LU 30A	LD/LU 30W	LD/LU 30G	LD/LU 30E	LD/LU 40C
LD/LU 37A	LD/LU 37W	LD/LU 37G	LD/LU 37E	LD/LU 50C
LD/LU 46A	LD/LU 46W	LD/LU 46G	LD/LU 46E	LD/LU 60C
LD/LU 58A	LD/LU 58W	LD/LU 58G	LD/LU 58E	LD/LU 70C
LD/LU 67A	LD/LU 67W	LD/LU 67G	LD/LU 67E	LD/LU 80C
LD/LU 99A	LD/LU 99W	LD/LU 99G		LD/LU 90C

Introduction

Precision environmental control may be defined as the simultaneous control of air temperature, humidity, distribution and cleanliness on a continual, around-the-clock basis.

Conventional building or 'comfort' systems, as they are called, are not designed for this 24-hour, year-round usage; they lack the ability to provide the precision and reliability or '**close control**' that is so critical to many applications.

The Liebert System 4 is a series of extremely versatile air conditioners designed by Liebert to meet the requirements of data processing centers and other small and medium sized critical areas.

The System 4 series comprises both direct expansion units and chilled water units. Cooling capacities range from 20 to 100 kW. Direct expansion units are equipped with semi-hermetic compressors, for precise refrigerant control, reliability and reduced energy consumption.

Liebert technology and energy efficiency

Liebert has become a world leader in precision environmental control systems by providing maximum energy efficiency without compromising precision and reliability.

Liebert takes a no-compromise approach to environmental control system design. All enhancements to energy efficiency are designed to reduce operating time of key components. This is accomplished by taking advantage of alternate sources of cooling when available or, by reducing compressor work load when the heat load in the critical space is lower.

Four-step - energy efficiency

Cylinder unloaders may be fitted on each compressor to reduce compressor capacity and energy consumption during low heat-load periods, refer to the optional equipment section for further details.

Manufacture

All Liebert System 4 units are built in accordance with European directives 98/37/CE (89/392/CEE; 91/368/CEE; 93/68/CEE), 89/336/CEE; 73/23/CEE. The Liebert Air Conditioning Quality System is approved by LRQA in accordance with the standards UNI EN ISO 9001: 1994.

Each unit is supplied complete with a Test Certificate and Declaration of Conformity.

All units carry the "**CE**" mark and fully comply with European Directives concerning mechanical, electrical and electromagnetic safety including:

- EN 50081-1, Emission ("Generic Emission Standard, Part 1: Residential, Commercial and Light Industry", January 1992).
- EN 50082-2, Immunity ("Generic Immunity Standard, Part 2: Industrial Environment", March 1995).

In addition, Radio Frequency Electromagnetic Field Immunity tests have been performed in the frequency range 27 MHz to 1000 MHz at 10 V/m to adhere to the requirements of EN 50082-2 and EN 50082-1.

The above mentioned standards refer to: Radiated Emissions (Enclosure); Conducted Emissions (AC Mains); Radiated E/M Field (Enclosure); Electrostatic Discharges (Enclosure); Fast Transients (AC and DC Mains, Signal Lines); Conducted Disturbances induced by RF Fields (AC and DC Mains, Signal Lines).

Applications

The System 4 unit is ideally suited for precision close control of the following types of environment:

- Data centers
- Telecommunications
- Industrial applications
- Office environments

The design of the System 4 unit may vary depending on the application, consult the Liebert Applications Engineering department for specific details.

System types

Air cooled

An air cooled indoor unit can be matched to either a dual circuit condenser or two single circuit, fan speed controlled condensers.

Water cooled

Water cooled units can be linked to a cooling tower water circuit via one supply and one return pipe, so reducing installation costs.

Glycol cooled

Glycol cooled systems can be matched to individual drycoolers or several units can be piped into a ring main configuration.

Glycool - free cooling

A conventional glycol system plus a second cooling coil to take advantage of colder outdoor temperatures to reduce or eliminate compressor operation.

Dual source

Where there is a supply of building chilled water or process water of a sufficiently low temperature, this supply can be used in conjunction with a secondary cooling coil as a reserve/standby cooling source, thus enhancing the reliability of the system. Consult your local Liebert representative.

Standard features - all systems

Level 5 controls

The System 4, Level 5, control system is microprocessor based and can be programmed to match the unique needs of any application. This processor integrates the separate mechanical and electrical components into a 'state-of-the-art' conditioned space support system that controls and monitors temperature, humidity, air flow and air cleanliness.

This Liebert manufactured control system offers a tailored and well proven advance in reliability and control flexibility allowing the System 4 to modify its performance in response to changing critical space conditions.

The monitoring system allows local monitoring and programming of the following room conditions:

- Temperature (^{o}C)
- Temperature setpoint (4°C - 29°C)
- Temperature sensitivity (1°C - 3°C)
- Humidity (%RH)
- Humidity setpoint (20%RH - 80%RH)
- Humidity sensitivity (1%RH - 5%RH)
- Humidifier flush rate - from 11 to 25. Adjusts the humidifier flush rate between 110% and 250% of the humidifier pan volume

The parameters are annunciated on an LED numerical display. Normal operating modes are indicated by LED's on the monitor panel. Alarm conditions activate an audible and visual indicator. An Alarm/Silence button will deactivate the audible alarm but the visual indicator will remain lit until the problem is corrected.

The following alarms are standard:

- High temperature
- Low temperature
- High humidity
- Low humidity
- Change filters
- Loss of air flow
- Temperature sensing error
- Humidity sensing error
- Humidifier/Local alarm (customer accessible)
- High head pressure - common alarm (compressor systems only)

The control system can be interfaced with the Liebert SiteScan site monitoring product, enabling control and alarm functions to be remotely monitored and programmed at a central location.

Note: *Full details of these and all other features of the Level 5 Controller are contained in the Level 5 Controller Operation Manual (P/N SLS-ELV5-2E) supplied with the System 4 unit.*

Note: *A number of optional extensions are available with the Level 5 Controller, the Extended Alarm Board, the Autochangeover Board and the 4-Step Board, refer to the optional equipment section of this manual for more details.*

Infrared humidifier

High-intensity quartz lamps above the stainless steel humidifier pan permit clean, particle-free vapour to be added to the air within 5-6 seconds of a call for humidification from the unit controller. The quartz lamps provide radiant energy that evaporates water in a pure state, without solids.

The humidifier is equipped with an automatic water supply system that significantly reduces cleaning maintenance. This system has an adjustable water-over-feed to reduce mineral precipitation. A drain valve is provided for draining the humidifier pan prior to inspection or servicing. The control valve, which incorporates a Y-type strainer, regulates flow at water pressures between 0.83 and 10.34 bar (83 and 1034 kPa).

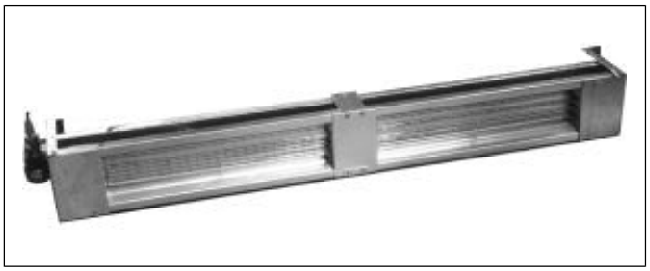

Figure 1 - Infra-red humidifier

In the event of a high water level condition, a water level sensor will indicate an alarm, deactivate the quartz lamps and shut the water make-up valve.

Electric reheat

The two-stage, six element reheats are of rigid, fin-tubular design for extended operational life. The reheat has ample capacity to maintain room dry-bulb conditions during a system call for dehumidification. Two equal stages give an accurate, controlled response to the requirements of the critical space. The low-watt density, phase balanced, electrically enclosed elements are surrounded by the tube and fins, reducing sheath temperatures and eliminating ionisation. The two equal stages of reheat create a noticeable lowering of energy use.

The reheat is provided with a manual reset, reheat safety thermostat, to disable the reheat in the event of high temperature.

The reheat safety stat. also incorporates a magneto-thermal switch which protects the reheat from short circuits, should the harness be damaged accidentally.

Electric reheat can be combined with hot gas or hot water reheat activated in different stages, consult Liebert Applications for further details.

Standard features - all systems (continued)

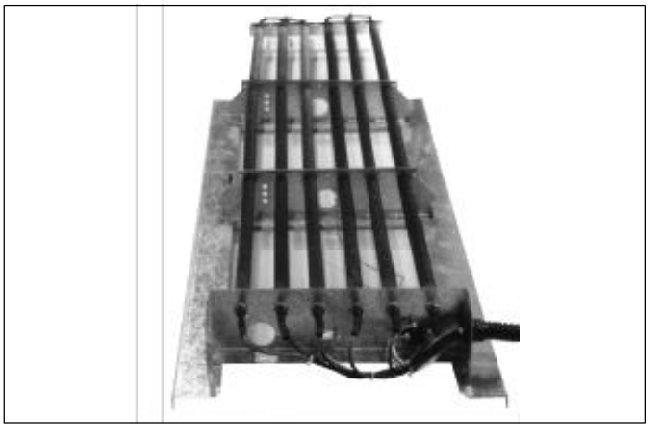

Figure 2 - Electric reheat assembly

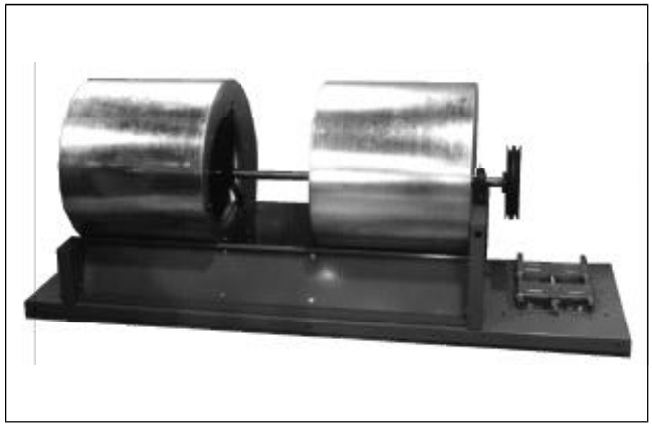

Figure 3 - Blower assembly

Cabinet and frame

The 1.5mm heliarc welded steel frame, provides maximum support for the unit components while the outer panels protect the system and reduce noise emission. The outer panels are manufactured from zintec, degreased and painted with epoxy-polyester powder paint, they are lined with 12mm Class 0, 90 kg/m^3 density insulation. Captive, ¼ turn fasteners on each panel allow controlled access for service and are positioned to enhance cabinet appearance. The top hinged accent panel and lift-off end panels can be opened for service or system monitoring without turning off the unit. Each panel is available in colours to co-ordinate with the decor of the application.

The front hinged accent panel is fitted with gas struts to ease servicing access and to prevent strain on the panel during opening and closing. All other panels are of the lift-off type. This arrangement reduces the access area normally required by a hinged panel.

The unit panels are fitted with seals to prevent air loss and to keep noise levels to an absolute minimum.

Fan section

The system features quiet, low speed fan assemblies with double width, double inlet blowers, with self-aligning ball bearings and factory-certified dynamic balance. The fan motor circuit features a manually-reset line break overload. The two-belt variable pitch drive can be field adjusted to match the fan speed to the air flow requirements of the data center. The draw-through design of the fan section supplies even air distribution across the A-frame coil, allows controlled by-pass-air humidification, static sealing of the filter section and low internal cabinet pressure losses.

The fan deck is of a flat bed design. The fans are driven by a single shaft. The fan shaft is mounted on two bearings, one of which is pillow block mounted on a rigid support channel, while the other bearing is mounted on radial arms attached to the fan assembly. The fan deck is isolated from the main frame assembly by means of rubber buffer vibration isolators, strategically positioned to minimise transmission of vibration between the fan deck and the frame assembly.

The fan motor is mounted on the fan deck and incorporates an adjustable slide rail mechanism which enables pulley sheave alignment and belt tensioning.

The motor is rated to IP44 and complete with internal thermal protection.

Air sail switch

A diaphragm-type, low pressure switch initiates an alarm when the unit is in operation and airflow ceases (usually caused by belt or motor failure). The loss of airflow alarm disables the unit.

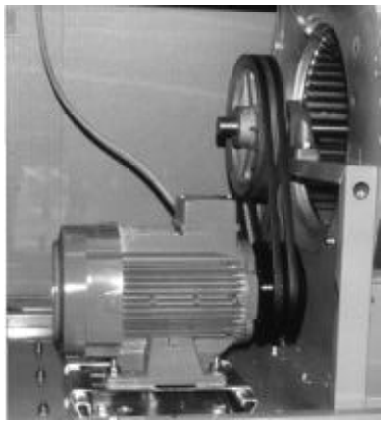

Figure 4 - Motor and drive assembly

Air distribution

All units in the range are available in three configurations, Downflow, Upflow Front Return and Upflow Bottom Return, refer to Figure 5.

Standard features - all systems (continued)

Filters

The air filter is made of synthetic fiber cells in a cardboard frame and is designed to minimise the air pressure drop while maintaining maximum filter efficiency. It is easily accessed/replaced on all models.

The guaranteed efficiency is EU4 (Eurovent EU4/5, 30% efficiency), (G4, CEN standard). Optional filtration levels to EU7 (G7) are available on request. Certain models may require filter plenums, consult Liebert Applications for specific details.

Prefilters are also available.

Filter clog switch

A diaphragm-type, low pressure switch is fitted to initiate a visual and audible change filter alarm when a pre-selected pressure drop across the filter bank is exceeded.

Access/Maintenance

Routine maintenance access to refrigerant circuit components, compressor, liquid receiver, thermal expansion valve, sight glass, filter dryer etc. is available through the front panel of the unit. Service access to the air filter, the fan, humidifier, electric panel, electronic controller PCB, electric reheats etc. is also through the unit front panel.

Customer connections to the refrigerant circuit (hot gas and liquid line), cooling water circuits, mains power input supply, humidifier water supply and condensate drain lines are located in the base of the unit.

The compressor is housed in a separate airtight compartment within the unit, allowing access to the compressor while the unit is in operation.

All exterior panels are of the lift-off type, allowing complete access to all parts of the unit in the event of extraordinary maintenance.

Locking disconnect switch

The locking disconnect switch interlocks with the front panel to prevent panel opening while the switch is in the 'ON' position.

Electrical panel

The electric panel, located at the front of the unit in an airtight compartment, contains the MCB's, contactors, transformer, controller PCB and overload relays etc. Each high voltage system component is provided with a separate overcurrent protective device. All high-voltage components are finger-protected. The electric panel is built in accordance with EN 60204-1.

All units are designed (as standard) for operation at 400V/3ph/50 Hz (± 10%) and are fitted with a mains disconnect switch.

Packaging

As standard, the units are wrapped in bubble-wrap to protect painted surfaces, enclosed in a cardboard box and mounted on a wooden pallet.

On request, for sea transport etc., the units can be packed in wooden crates or cases complete with silicon desiccant.

Warranty clauses

The warranty does not cover any damage or malfunction of the unit which may occur during or as a result of operating the unit outside of the specified application limits.

Liebert does not accept responsibility for any damage caused by improper use of the product.

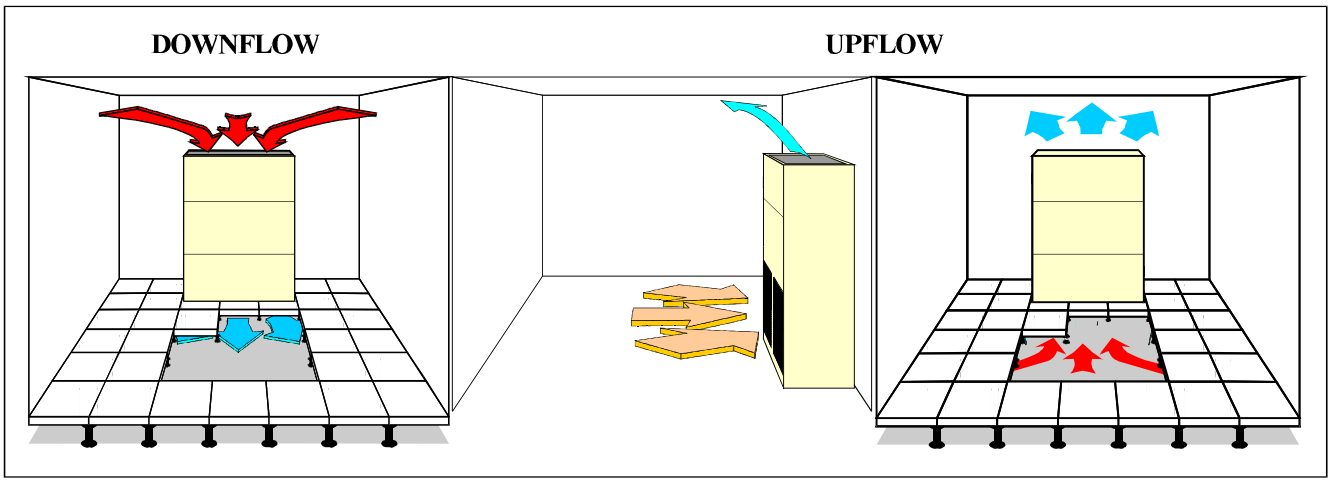

Figure 5 - Air distribution, upflow and downflow units

Standard features - individual systems

Refrigerant circuit - dx systems only

Semi-hermetic compressors

All units are fitted with two rugged cast-iron, semi-hermetic compressors for maximum operating efficiency and easy field servicing. The compressors, which are mounted on vibration isolators, include the following built-in components:

- Overload relays
- Oil sight glass
- Manual reset high pressure switches
- Pump down low pressure switch
- Suction line strainer (integral)
- Reversible oil pump for forced feed lubrication
- Pump down control

The compressors are located in a separate compartment within the unit and can be easily monitored in operation without having to interrupt the system, see Figure 6. These compressors stand on a reputation for dependability, and running at a maximum of 1450 r.p.m., are not only quiet, but also energy efficient.

A-frame coil

The interwoven arrangement of two direct expansion cooling circuits provides maximum coil area for more precise control of temperature and humidity. With this computer designed coil arrangement, low velocity air passes through both circuits of the coil providing the most effective surface exposure with less turbulence and greater efficiency in the cooling and dehumidification processes. The coil is designed for the high sensible heat ratio required by critical spaces. Because of the interwoven circuitry, which has alternating portions of the coil circuited to each of the two compressors, the entire finned area is used for cooling by either compressor.

A corrosion resistant drain pan is provided with the coil on all models except upflow Glycool models, where a stainless steel drain pan is used.

Sight glasses

Refrigerant line sight glasses serve as a means of quick visual inspection to determine if there is moisture in the system and if the system is properly charged.

Filter-drier

Liquid line filter-dryers ensure a clean, moisture-free refrigerant system for extended component life. The filter drier is suitable for use with standard R22 and optional "Zero ODP" refrigerant R407C.

Expansion valves

The externally equalised expansion valves smoothly control refrigerant flow during varying indoor heat loads and outdoor ambient temperatures by controlling evaporator superheat.

Mufflers

Specially engineered mufflers fitted in the discharge line afford a quiet pulsation free refrigeration system.

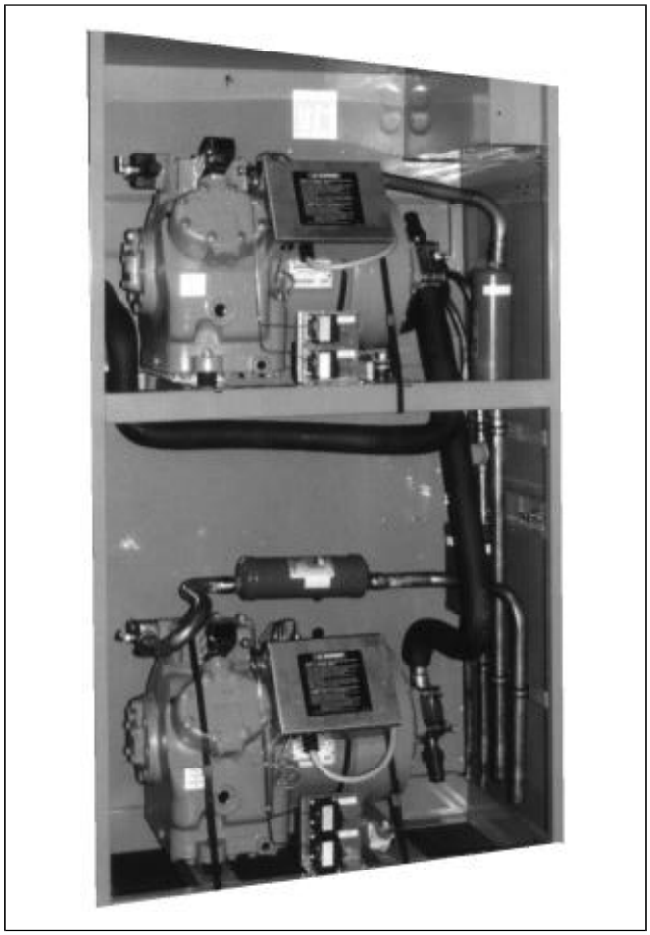

Figure 6 - Compressor compartment

Standard features - individual systems (continued)

Refrigerant circuit - dx systems only (continued)

Safety controls

Each compressor has a high pressure switch with a manual reset feature for high pressure protection, a low pressure switch for loss of refrigerant charge protection, and a high pressure alarm circuit to visually and audibly warn of high system pressures; allowing corrective action to be taken before a system failure.

Refrigerant

R22 HCFC is the standard refrigerant used in the System 4 range. An optional "Green" refrigerant, R407C is also available. In this case the compressor is supplied with ester oil.

Air cooled units are shipped with a nitrogen holding charge, water, glycol and glycool units are charged with refrigerant in the factory.

Air cooled units only

Air cooled condenser

A matching Liebert air cooled condenser with fan speed control should be ordered with the unit. All Liebert condensers are suitable for use with both R22 and R407C. Details of condensers for 32°C ambient are provided in this manual, full details of all condensers for all outdoor ambients are available in the Condenser Technical Data Manual, (P/N SLE CD TDM).

Note: *The suggested condenser selections/performances for each outdoor ambient are based on calculated data. The actual selection of a condenser should always be verified on the basis of the specific working conditions on each site.*

Figure 7 - Air cooled condenser

Water/glycol/glycool only

Condensers

The water cooled condensers used in R22 applications are of the heavy duty, shell and tube, parallel-flow type with removable heads; and are mechanically cleanable from either side. The shell side of the condensers acts as a receiver and holds the refrigerant charge during pumpdown. Pressure relief valves are fitted to the condensers. The valve is equipped with a threaded connection to allow the refrigerant to be discharged outside of the conditioned space.

Water cooled units can operate with mains water, cooling tower water or water in a closed circuit with an external drycooler. Glycool units operate with water in a closed circuit from an external drycooler only.

When operating in a closed circuit, it may be necessary (depending on outside temperatures) to add monoethylene glycol to prevent the water freezing in winter , refer to the unit Installation Manual for applicable percentages.

A pump is used to circulate water (water/glycol) through the unit (it is not supplied).

If mains water or tower water is used, it is recommended to fit a mechanical filter on the water line to protect the condenser against possible impurities contained in the water (for condenser cleaning, refer to the Installation Manual).

Water regulating valves

Head pressure operated regulating valves accurately control the condensing temperature and system capacity for various entering fluid temperatures. A 2-way head pressure control valve is fitted as standard on water cooled units, a 3-way head pressure control valve is fitted as standard on glycol cooled units. The valves are rated at 1030 kPa (150psi).

For higher water inlet temperatures, higher water flowrates are required and possibly special water regulating valves, consult Liebert Applications Engineers for details.

Expansion Tank

A glycol system can be supplied with an expansion tank to allow for fluid expansion in the closed glycol loop.

Drycooler

A matched external drycooler can be supplied if required. Details of the drycoolers for 32°C ambient are provided in this manual, full details are available in the Drycooler Technical Data Manual (P/N SLE DC TDM).

Standard features - individual systems (continued)

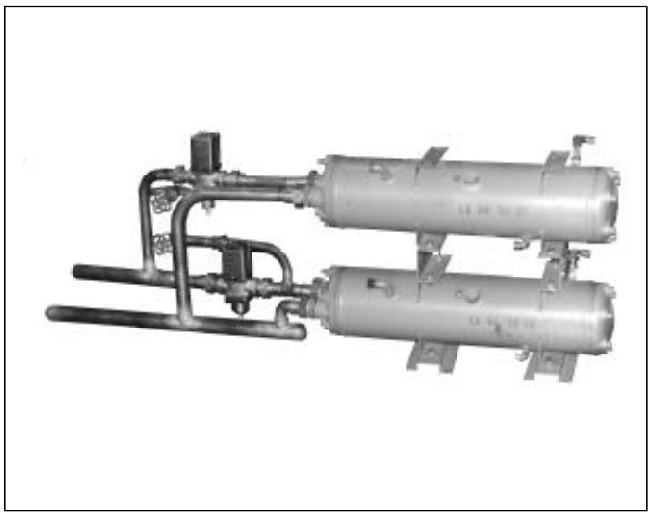

Figure 8 - Water cooled condenser assembly complete with head pressure control valves

Glycool only

In the Liebert GLYCOOL (free cooling) system, a secondary coil (econo-coil) is integrated into a glycol-cooled System 4 unit. At suitable outdoor temperatures, the GLYCOOL system is capable of providing the total system capacity. At outdoor temperatures less than 18°C, the 3-way glycool valve permits partial cooling of the conditioned space. When cooling is required, the microprocessor activates the glycool valve to direct glycol (from the heat rejection loop) to the econo-coil located upstream of the evaporator coil.

The GLYCOOL system contains all the standard features of a glycol cooled system, together with the following additional components:

Comparative temperature monitor

A solid-state temperature monitor compares the conditioned space air temperature with the entering glycol temperature. When the air temperature is higher than the glycol temperature, the monitor communicates to the microprocessor control that 'free-cooling' is available.

Glycool coil

The Glycool coil is located in the return air stream of the air conditioning system. The air is filtered before entering the coil, and is then either pre-cooled or totally cooled before entering the refrigeration coil. Glycol flow to the coil is controlled by a pre-piped 3-way equal percentage valve. When supplied with a 7.2°C glycol solution, the coil is sufficiently sized to offer an equal cooling capacity to that obtained during the refrigeration cycle with both compressors energised.

Glycool 3-way control valve

The 3-way equal percentage control valve opens fully when the temperature of the glycol solution is below room temperature to take advantage of all possible free cooling. As the outdoor ambient temperature drops, the three-way control valve modulates the flow to the coil, as in a Chilled Water system. The valve serves to maintain constant temperature in the room. It includes an operating linkage and electric motor.

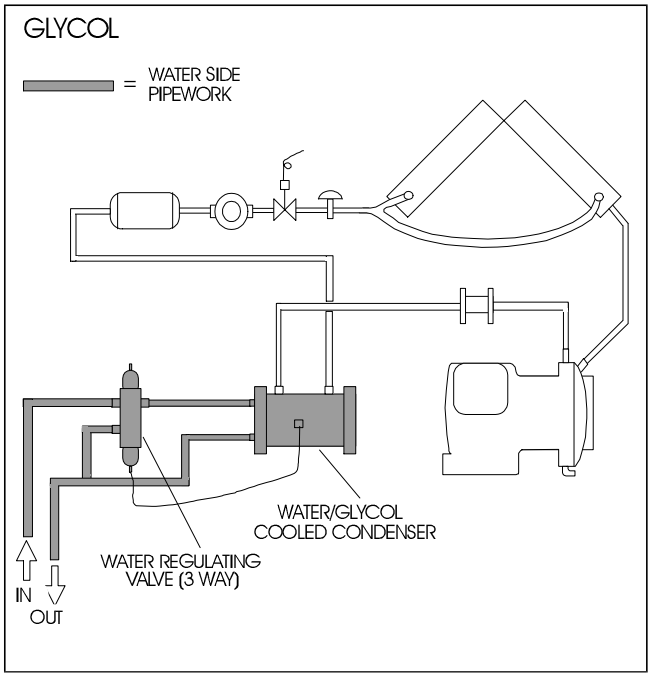

Figure 9 - Glycol cooled circuit schematic

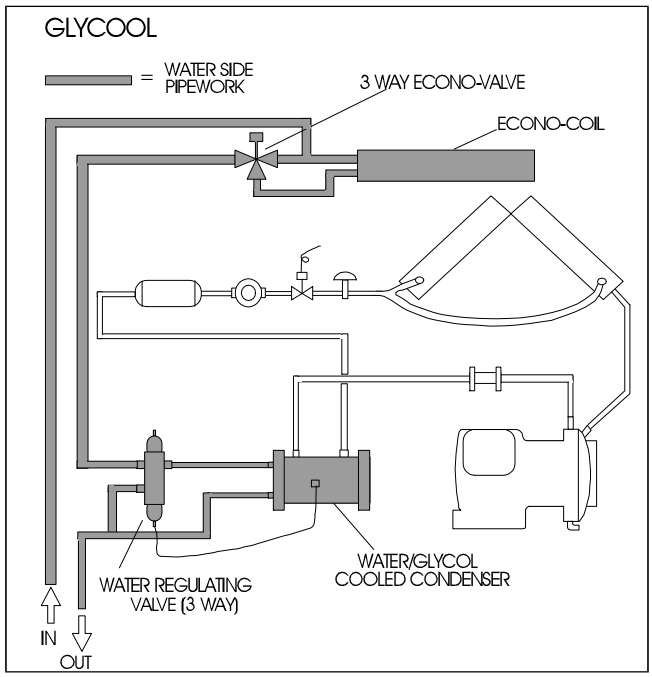

Figure 10 - Glycool circuit schematic

Standard features - individual systems (continued)

Figure 11 - Drycooler

Dual source only

Dual source 3-way control valve

The 3-way equal percentage control valve opens fully when the chilled water source is being utilised as the primary source of cooling and operates as in a chilled water system. The valve serves to maintain constant temperature in the room and includes an operating linkage and electric motor.

Chilled water only

A-frame coil

This large face area/low face velocity, deep wave, coil allows precise control of temperature and humidity during the cooling and dehumidification mode, and is designed to optimise fluid velocity and minimise pressure drop. The full face area is active during cooling and dehumidification, resulting in operational energy saving in the application area. An aluminium condensate pan is provided with the A-frame coil.

3-way control valve

The chilled water valve provides equal percentage control action in response to room temperature and humidity as sensed by the microprocessor. This results in a proportional ratio of capacity to stem travel. The valve includes an operating linkage and electric motor.

Operating limits (all models)

System 4 direct expansion and chilled water units are designed for operation within the following working limits (the limits are applicable to newly commissioned machines which have been correctly installed and maintained).

Indoor operating range

All models from 18.0°C, 45% R.H. to 27.0°C, 55% R.H.

Outdoor operating range (air cooled only)

Lower limit

-20°C with fan speed control installed in the condenser.

Upper limit

This is determined by the capacity of the condenser coupled to the unit (at the relevant outdoor ambient). If the limit is exceeded, the High Pressure Switch will shut the compressor down. The switch must then be manually reset after the problem has been rectified.

Condenser installation (air cooled only) - semi-hermetic compressors

Condenser above indoor unit

Maximum distance between indoor unit and external air condenser: 60 meters equivalent length.

Condenser below indoor unit

Maximum geodetic height difference between condenser and unit: 9 meters.

Condenser installation (air cooled only) - scroll compressors

Condenser above indoor unit

Maximum distance between indoor unit and external air condenser: 30 meters equivalent length.

Condenser below indoor unit

Maximum geodetic height difference between condenser and unit: 3 meters.

Air flow

The maximum air flow and available External Static Pressure are given in the Technical Data section of this manual. The fan motor thermal overload protects the unit from any damage which could result from operating outside the specified values.

Voltage tolerance

All models: 400 V ± 10%

Frequency tolerance

All models: 50 Hz ± 2 Hz.

Optional equipment - all systems

Microprocessor control system - (Level 15 graphics)

The Level 15 Microprocessor Controller sets even higher standards in purpose-designed control systems for precision air-conditioning. It simultaneously monitors the critical space and signals alarms either locally or remotely. The graphics screen displays all the major parameters, including symbolic representation of unit functions, such as heating, cooling etc.; in addition temperature and humidity variations with time can be presented graphically on the screen. All diagnostic procedures, including the checking of 24V input and output signals and the microprocessor itself, can be run from the front panel

Features

- Backlit LCD display
- User interface via membrane keys
- Battery-backed clock for date/time and real time functions
- Password control for setpoints, and unit/control setup and diagnostics
- Graphics display can provide graphs of temperature and humidity over a 24 hour period, as well as graphs of 4 separate user-defined analogue inputs

Selectable control logic

Fuzzy logic - The fuzzy logic control algorithm is based on a logical system which emulates the human thought process using a natural language structure. A Fuzzy Logic Controller (FLC) provides a means of converting a linguistic control strategy, based on expert knowledge/experience, into an automatic control strategy.

The measured parameters/states from the controlled system are converted into linguistic values, which in conjunction with the Database of Experience, are used by the Decision Making Logic to evolve a control action. This process can be summarised as: [IF {a given set of conditions occur} THEN (based on previous knowledge/experience) {a logical set of consequences can be inferred}.

The advantages of Fuzzy Logic over Conventional Logic are as follows:

- Fuzzy Logic uses a more detailed description of the controlled process in its control algorithm and therefore greater precision regulation of the controlled parameter (temperature/humidity) is possible
- Reduced “hunting” or oscillating of the control system due to the adaptive nature of the FLC
- Reduced re-positioning of valves etc. and hence improved reliability and service-life of components

Programmable P.I.D. - (proportional integral derivative). Immediate proportional response with an integral action which continuously adds/subtracts a small amount of cooling /heating to the total control output until the temperature is at setpoint. The derivative action increases the control output signal depending on the rate of change of the controlled parameter. The amount of integral action and derivative action is selectable for a given application.

Proportional control - controller output is proportional to the difference between the required setpoint and the actual measured values.

Programmable load control

- Programmable auto restart
- Sequential load activation after power failure to minimise inrush currents
- Compressor sequencing control
- Programmable winter start delay for different climates
- Short cycle control

Refrigerant circuit protection

- Override of compressors to provide emergency cooling
- Compressor short cycle control
- Automatic compressor sequencing on multi-stage units

Control accuracy

- Humidity control can be based on relative or absolute humidity
- Choice of control algorithms, including Fuzzy Logic
- Sensor calibration for both temperature and humidity

Status information

The status information provided includes:

- Graphical display of percentage of operation time in each mode
- Unit operational status for: heating, cooling, humidification, dehumidification, Econocooling, etc.
- Run time on loads for: compressors, main fan, humidifier, reheats, chilled water valves, Econocoil valves, etc.
- Four programmable analogue inputs (4 - 20mA or 0 - 10V DC or 0 - 5V DC)
- Graphical display of Temperature/Humidity and all analogue inputs

Alarms

The microprocessor activates an audible and visual alarm in the event of any of the following conditions:

- High or low temperature
- High or low humidity
- High compressor head pressure (compressor 1 and 2)
- Humidifier problem
- Loss of air flow
- Change filters
- Manual override
- Compressor short cycle
- Compressor overload 1 and 2
- Main fan overload
- Low suction pressure
- Four customer programmable alarms

Optional equipment - all systems (continued)

Alarm Features

- Alarm prioritisation (Urgent/Non Urgent)
- Programmable time delay for each alarm
- Programmable alarm disable for each alarm
- Common alarm relay with the ability to select any alarm(s) to energise it
- Alarm history log of previous alarms including date and time stamp
- Graphical display of Water Detection including a room floor plan

Remote Monitoring

- SiteScan port for the provision of all status and alarm information, and facilities for the remote adjustment of temperature and humidity setpoints and sensitivity, high and low alarms, control algorithms, alarm setups, etc.
- Interfaces with building energy management systems via an ECA2 communications card or the SiteScan data concentrator

Note: *Full details of these and all other functions of the Level 15 Controller are provided in the Level 15 Graphics, Controller Operations Manual (P/N SLS-EG15-2E).*

SiteScan

SiteScan is an on-line management centre for monitoring and controlling all support systems in a large data processing installation. The equipment provides early warning alarms and total site management data.
SiteScan is a programmable, menu-driven and up-gradable, software-based system which uses a microcomputer as the central processing unit.

Four primary site management programs are built into the SiteScan system.

Alarm functions—provide instant warning of potential problems. A seven-level selection of options in response to each alarm offers total flexibility in designing a customised alarm system.

Control functions—allow critical setpoints and sensitivities to be adjusted by remote control for dynamic, single-point site management. Password access preserves site security.

Status functions—provide complete information on all critical space support systems, including real-time status of all monitored parameters and any existing alarm conditions.

History functions—offer database management capabilities. These functions track, store and graphically display crucial data and trends for site management activities such as capacity analysis, growth predictions and energy management.

SiteScan makes full use of its personal computer-based central processor features; including RS-232 communications and other output ports.

Extended alarm board (Level 5 only)

The extended alarm board provides volt-free changeover contacts for all individual alarm and status conditions. This allows the air conditioning unit to be hard-wired into a building management system. For full details refer to the Level 5 Controller Operations Manual (P/N SLS-ELV5-2E).

Autochangeover board (Level 5 only)

The autochangeover board is a hard-wired option which transfers environmental conditioning control to a standby unit in the event of any common alarm. For further details, contact your local Liebert representative.

Building management interface

ECA2 card (RS232)

An RS232 interface for use between the indoor environmental control unit and a Building Energy Management System (BEMS). It employs serial binary data interchange, usually in seven bit ASCII code along a single pair of cables.

BMI card (hard-wired interface)

Provides contact closure signals corresponding to indoor environmental control unit status or alarm conditions, plus analog outputs corresponding to monitored temperature and humidity. There is no requirement for special software to be written by the Building Energy Management System (BEMS) supplier. Each signal corresponds to a point on the BEMS outstation. The card also allows the BEMS to remotely disable the humidifier and reheat.

Smoke alarm

A smoke detector/alarm is available as an option. The smoke detector will activate the alarm and stop the unit if smoke is detected in the return air. The sensor is an optic smoke detector (Tyndall effect) which is insensitive to light or air movement.

Firestat

A firestat/alarm is available as an option. The firestat deactivates the unit when the return air temperature is too high. The firestat can be mounted in the unit or remotely, consult Applications Engineers for details. The detector is complete with an NTC thermistor.

Optional equipment - all systems (continued)

High efficiency filters

Optional 150mm EU7 (Eurovent EU4/5 (G7, CEN standard)) high efficiency filters are available for models (except downflow glycool models which have 100mm EU7).

Floorstand

Floorstands are available in heights of 230, 305, 380, 460, 530 and 610mm. Each height is adjustable over a ± 38mm range. The floorstands permit installation and connection of the system prior to installation of the raised floor. A factory installed turning vane, to direct the air in the floorstand, may also be ordered if required.

Water detection options

The water detection sensor LT410 contains an isolated switch that closes when water (or other conductive liquid) is detected by the sensor probes. The sensor is hermetically sealed, robust and should be fitted in the location where water problems might occur.

The LT460 is a water detection cable. The cable is placed on the floor around the base of the unit. It will generate an alarm (via contact closure) if water (or other conductive liquid) comes in contact with the cable.

Depending on the specific unit configuration, a stepdown isolation transformer (available from Liebert) may be required with the water detection system, full details are available from your Liebert representative

Condensate pump

The condensate pump is provided for mounting in the bottom of the unit and is complete with sump, motor, pump and automatic control. The pump has a capacity of 548 l/hr at a head of 6 metres of water.

Hot water reheat

The reheat coil is constructed of copper tubes with aluminium fins. Hot water flow is controlled by a 3-way (on/off) valve from the microprocessor control panel. The system is completely pre-piped and includes a Y-type strainer. The economical hot water reheaters have the capacity to maintain dry bulb conditions when the system is calling for dehumidification.

On upflow models the hot water reheat coil and valves are located in a plenum on top of the unit. It is not available on units with hot gas reheat.

Note: *If hot water reheat is required in Glycool systems, consult Liebert Applications Engineering.*

Electrode boiler steam humidifier

The electrode boiler steam humidifier includes automatic water level sensing and automatic flushing. The humidifier produces clean particle free steam at an adjustable rate of output from 30% - 100%. Water usage is kept to a minimum by using programmed unit operations. The water level is maintained automatically using current sensing.

Note: *These humidifiers should only be used where the supply water has a conductivity between 80 and 1000 µS/cm and a water pressure of 0.3 to 8 bar (Max. supply water temperature 30 °C).*

Non-return valves (air cooled models)

Refrigerant non-return valves for air-cooled units are available as an option.

The valve is installed on the liquid line, close to the condenser and mounted vertically.

Hot gas bypass (dx models)

The hot gas by-pass valve is installed between the compressor discharge line and the leaving side of the expansion valve. In normal operation, when the evaporator is under full load, the system will maintain enough pressure on the leaving side of the hot gas valve to keep the valve port closed.

If the load on the evaporator decreases, the evaporator will get colder. When the coil is too cold, the internal pressure in the evaporator drops and allows the hot gas by-pass valve to open. Hot gas then mixes with the liquid coolant on the discharge side of the expansion valve, raising the temperature and pressure in the evaporator. The nett result is a reduction in the cooling capacity of the unit to match the load and the prevention of unnecessary compressor cycling.

This option is not available on units with Hot Gas Reheat or units with 4-step control.

Hot gas reheat

Hot gas reheat uses the heat which is normally rejected in the condenser to heat the air in the conditioned space, thus saving energy. A control valve prevents the refrigerant from flowing to the reheating coil when reheat is not required. The reheat coil is single or double row and constructed from copper tubes with aluminum fins.

When hot gas reheat is requested, it is supplied in conjunction with 1 stage of electrical reheat, they operate as follows:

Stage 1: Hot gas reheat

Stage 2: Hot gas reheat + electrical reheat

This option is only available on downflow Water, Glycol and Glycool units.

Optional equipment -all systems (continued)

Special packaging

Where the unit is to be transported by sea or in other cases where heavy duty packaging is required, special crating is available.

This can consist of either a wooden crate over the standard carboard/bubble wrap packaging or the entire unit can be encased in a wooden box.

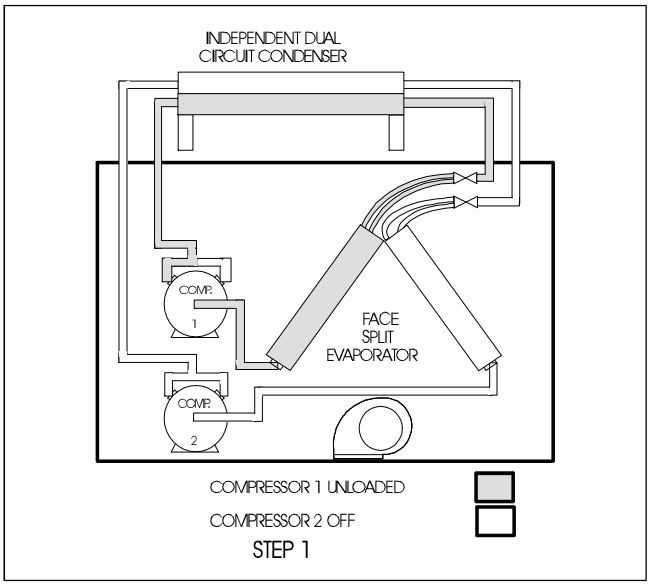

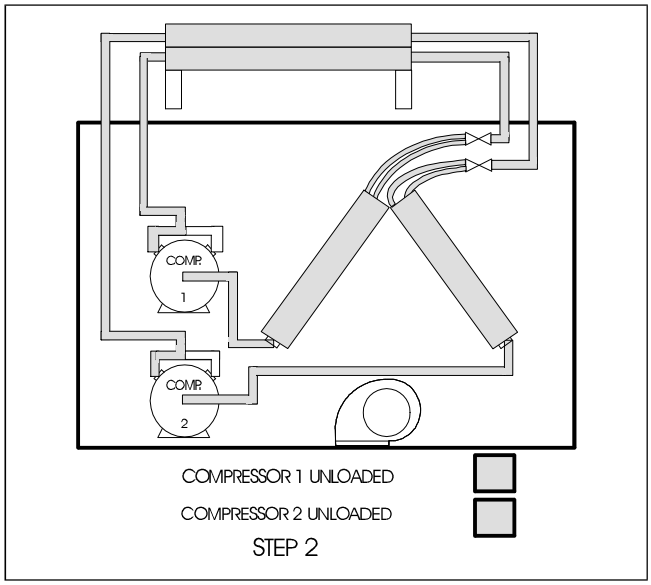

Special packing for sea transport, consisting of a wooden box or crate in addition to normal cardboard, can be supplied on request.

Plenum - no grille

An intake/supply plenum is available for connection between the unit and a false ceiling. The plenum is manufactured from the same material and in the same colour as the unit.

The plenum consists of panels lined with class 0 (ISO 1182.2), 90 kg/m^3 density, non-flammable insulation.

Available heights are 450 mm, 650 and 850 mm.

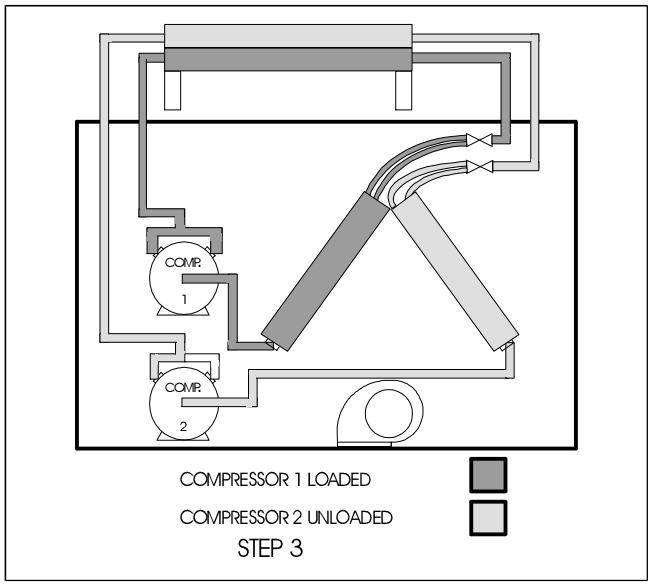

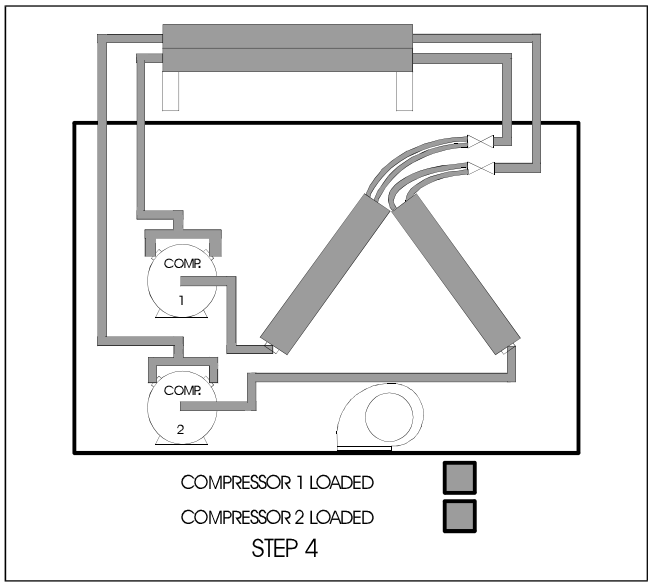

Plenum with fixed grille (upflow)

A supply air plenum with fixed horizontal air flow can be installed on top of the unit. The 850 mm high plenum is

manufactured from the same material and in the same colour as the unit.

The plenum consists of panels lined with class 0 (ISO 1182.2), 90 kg/m^3 density, non-flammable insulation.

Plenum with adjustable louvred grille (upflow)

A supply air plenum with adjustable (up and down) air flow can be installed on top of the unit. The 850 mm high plenum is manufactured from the same material and in the same colour as the unit.

The plenum consists of panels lined with class 0 (ISO 1182.2), 90 kg/m^3 density, non-flammable insulation.

Caution is advised against extreme deflection of the louvres as this can obstruct the air flow and reduce the unit's cooling capacity.

Air intake from the bottom (upflow models)

Upflow models are normally front return. If required, they can be supplied as bottom return. Bottom return models are fitted with a blank front panel (this reduces the sound level of the unit). Available on air and chilled water cooled units only.

Air intake from the rear (upflow models)

Upflow models are normally front return. If required, they can be supplied as rear return. Rear return models are fitted with a blank front panel (this reduces the sound level of the unit) and a filter box at the rear.

Alternative refrigerant R407C

An optional "green" refrigerant, R407C can be supplied with all compressorised models. With the R407C option, the compressor is filled with a special ester oil and crankcase heaters are fitted. In Water, Glycol and Glycool units, a plate heat exchanger replaces the standard shell and tube condenser.

Air cooled units are filled ex-factory with a holding charge of dry nitrogen. Water, Glycol and Glycool units are charged with R407C.

Scroll compressors

The standard semi-hermetic compressors are replaced with fully hermetic compliant scroll compressors. These compressors incorporate several safety features for protection during normal and the occasional abnormal operating conditions. They are:

- Self resetting overloads to sense excessive currents and temperatures.
- An internal pressure relief valve which limits discharge pressure to protect mechanical parts.
- Motor insulation that is resistant to chemical attack.
- Rubber mounting to ensure reduced compressor noise and vibration.

The scroll compressors are fitted with rotolocks.

Crankcase heaters

Crankcase heaters are available with all compressorised models. They maintain minimum refrigerant temperature and are energised while the unit is powered and the compressor is off.

Four-step system

The Liebert four-step cooling system reduces compressor cooling capacity and energy consumption during periods of low room load conditions. This is accomplished by means of a specially designed control system and cylinder unloaders on one head of each of the two semi-hermetic compressors. As a result, four distinct stages of cooling are activated to respond to varying room conditions. (This option is not available on the LD/U20A).

Optional equipment - all systems (continued)

The first step operates with the lead compressor and its unloader valve selected ON and the lag compressor and its unloader valve selected OFF. This configuration provides 38% of the total unit capacity while using only 25% of the total energy.

The second step operates with both compressors and their unloader valves selected ON. This configuration provides 76% of total system capacity with 50% of the total compressor energy.

Because each compressor is started up unloaded, with the unloader valve activated, initial current surge and wear on the compressor is reduced.

The third step operates with the lead compressor selected ON and its unloader valve selected OFF, while the lag compressor and its unloader valve are selected ON. This configuration provides 88% of total system capacity with 75% of the total compressor energy.

The fourth step operates with both compressors ON and both unloader valves selected OFF. This configuration provides 100% of total system capacity with 100% of the total compressor energy.

The four-step cooling system can be specified for air, water and glycol cooled systems from 30 to 100 kW. Glycool and Dual Source systems can also be equipped with the four-step feature to achieve maximum energy efficiency.

Optional equipment - all systems (continued)

Double skin panels

The double skin panels option consists of a 1mm Zintec outer panel, a 1mm Zintec inner panel and 90kg/m^3 Class 0 insulation sandwiched between. Double skin panels significantly reduce the panel break-through noise from the unit.

Glycool models only

High pressure

The high pressure option consists of a two-way with bypass or a three-way water regulating valve, and a shell and tube condenser rated at 20.68 bar (2068 kPa) water pressure. This option is required in installations with large static heads, i.e. tall buildings.

Chilled water

Flow switch

The flow is installed as standard on the chilled water inlet line but can be fitted on the bypass-leg (3-way valves) or between the valve and the coil, if required by the application.

The switch is of the paddle type and is complete with volt-free contacts. It can be wired to activate an alarm and/or shut down the unit should the chilled water supply be interrupted.

High pressure

For special applications, a high pressure three-way modulating valve can be provided. This valve is designed for water pressure up to 27.56 bar (2756 kPa).

Balance valve

A circuit setter/balance valve can be fitted to the chilled water bypass line to balance the water side pressure drop across the unit. For other configurations, contact Liebert Applications Engineering.

Spring to close/open valve actuator

In the event of power loss to the unit, the valve actuator will automatically open or close fully (as required by the application).

High pressure applications

For special applications, a high pressure actuator can be provided. This valve is designed for water pressure up to 27.56 bar (2756 kPa). High pressure piping is included with this option.

2-way chilled water valve

Where required by the application, the units can be fitted with a union body two-way chilled water valve complete with motorised valve actuator. The valves are designed for standard pressure applications in a closed system.

Dual source

The addition of a dual source coil converts an air, water, glycol or chilled water unit to a dual source cooling system. A 3-row coil is fitted on upflow units, a 4-row coil is fitted for downflow units.

With the addition of the dual source coil, a modulating control valve and a comparative temperature sensor, the unit can function either as a modulating chilled water system, as a compressor system, or a combination of both. Switchover between the two cooling modes is performed automatically by the microprocessor and the comparative sensor. This provides increased redundancy and flexibility for the environmental control system.

Water cooled

3-way water regulating valve

Water cooled units are fitted with a 2-way valve as standard. If required they can be supplied with a 3-way valve. The valves are rated at 1030 kPa (150psi).

Glycol cooled

2-way water regulating valve

Glycol cooled units are fitted with a 3-way valve as standard. If required they can be supplied with a 2-way valve. The valves are rated at 1030 kPa (150psi).

Water/Glycol cooled and Glycool

High pressure applications

The high pressure option for the condenser circuit consists of a two-way with bypass or a three-way regulating valve, and a shell and tube condenser rated at 20.68 bar (2068 kPa) water pressure. This option is required in installations with large static heads, i.e. tall buildings.

Installation and application guidelines

Selecting the critical space location

Selection of the site requires evaluation and consideration of many factors. These include the proximity of the critical space to related data processing operations, security, interior vs. exterior zones of the building and proximity of the packaged environmental control system to the outdoor air cooled condenser, cooling tower or drycooler. In general, the location of the conditioned space should be in an area of the building which is not affected by outside temperature or relative humidity. If a site is chosen with an outside wall, the area of window glass should be kept to a minimum and double or triple-glazed to prevent condensation in the winter.

Critical space preparation

When designing the conditioned room, consideration should be given to the accessibility and dimensional requirements for the environmental control equipment, as well as the electronic equipment. This includes checking the size of door openings, elevator capacities and selecting a flooring system capable of supporting all the hardware. Consideration should also be given to the type of electrical power distribution and control system to be used in the critical area.

Sufficient area for expansion and redundancy in environmental control units should be considered during initial planning.

The room should be well insulated and must have a sealed vapour barrier. The ceiling or ceiling plenum must be sealed, because a false ceiling provides no protection against vapour migration. Use a rubber or plastic base paint on concrete walls or floors to prevent moisture migration. Doors should not be undercut or have grilles in them. Light fixtures which require room air to cool them and allow room air to enter the area above the false ceiling should not be used when the false ceiling area is not part of the site air distribution plan.

Outside air entry should be kept to an absolute minimum. Fresh air adds to the heating, cooling, humidifying and dehumidifying loads on the site. It is recommended that outside air be kept to a minimum of the total air circulated in the conditioned area because of the small number of people who will be working in the area.

Installation of the environmental control system

The indoor packaged system can be installed on an accessible raised floor system. It may be necessary to furnish additional pedestal supports under the unit to ensure maximum structural support. A separate floorstand for the unit may be used as a support, independent of the raised floor, and installed prior to the flooring system (see Optional Features).

The use of a floorstand permits the environmental control system to be installed, piped, wired and inspected prior to the installation of the raised floor. This permits much easier access to all underfloor piping and wiring and enables the construction to be completed in the least amount of time. A floorstand further provides vibration isolation from the adjacent raised floor and eliminates the need for cutting special openings in the floor panels under the unit. Provide approximately 864mm service clearance on the left, right and in front of the unit whenever possible. The minimum space required for installation is 500mm on the compressor end, 500mm on the right end (500mm for downflow air and chilled water units) and 600mm in front of the unit. This space is necessary to provide for routine maintenance such as renewing filters, adjusting the fan speed and cleaning the humidifier.

Electrical requirements for the environmental control system

Electrical service is required for models at 400/3/50 and must satisfy both national and local electrical codes. Select the proper wire size for minimum allowable voltage drops to ensure dependable operation during periods of peak power usage when fluctuations may occur.

If emergency shut-down of each environmental control system is required through fire protection systems, panic buttons, etc., the low voltage terminal strip located within each unit is utilised.

Air distribution

Liebert models may be specified for vertical (upflow) or (downflow) underfloor air distribution. They are designed for constant air delivery; hence, any unusual restrictions within the air circuit must be avoided. Vertical units may be provided from the factory with discharge air plenums or duct collars.

For underfloor air distribution, observe the following guidelines:

1. Avoid locating units in an alcove or at the end of a long room where it would be difficult to achieve satisfactory air throw.
2. Avoid locating units too close to each other. Units located relatively close to each other tend to reduce the effectiveness of the air distribution.
3. Select the air supply grilles and perforated panels for the raised floor to ensure minimum loss of pressure in the circuit. Air volume dampers on grilles, which extend several centimetres below the surface of the raised floor, are usually detrimental to air flow. Consideration of the height of the damper on the grille in conjunction with the floor height will determine whether this type of grille may be used.

Installation and application guidelines (continued)

4. The grilles used in raised floors vary in size, the largest being approximately 457 x 152mm. A larger grille size would be detrimental to the structural capacity of the raised floor panel. A 457 x 152mm heavy duty pencil proof type grille typically has 0.036m of free area.
5. Perforated panels are available from various manufacturers of raised floors. These panels are usually 610 x 610mm square and have a nominal free area of approximately 0.07 to 0.09 m.

   Use caution in selecting perforated panels since some manufacturers have only 0.023 to 0.026 m of free area, requiring four times as many panels.
6. Always check specifications of the floor supplier before specifying the total number of perforated panels and grilles required to handle the air flow. The proper specification for perforated panels and grilles should indicate the total free area required for air delivery rather than the number of panels and grilles.
7. The decision to use a grille or a perforated panel depends on several factors. Perforated panels are generally used in the critical space near the hardware. Grilles with adjustable dampers should be used in areas where 'personnel comfort' is a prime consideration, such as: keypunch areas, areas around the line printers, or other operator areas. This will allow personnel to adjust the flow rates for their comfort rather than the equipment loads. Caution should be used when applying dampered grilles or dampered perforated panels around high heat load areas to ensure that the dampers are not closed-off by shuffling of cables, occasional operator discomfort, or carelessness.

Recommended free area m^2 for grilles at output velocities of 2.8 and 3.1 m/s

Model number	2.8 m/s	3.1 m/s
LD 20 A/W/G/E	0.518 m^2	0.468 m^2
LD 30 A/W/G/E	0.757 m^2	0.684 m^2
LD 37 A/W/G/E	0.911 m^2	0.823 m^2
LD 46 A/W/G/E	1.275 m^2	1.152 m^2
LD 58 A/W/G/E	1.557 m^2	1.406 m^2
LD 67 A/W/G/E	1.821 m^2	1.645 m^2
LD 99 A/W/G	2.275 m^2	2.055 m^2
LD 30 C	0.796 m^2	0.719 m^2
LD 40 C	0.918 m^2	0.829 m^2
LD 50 C	0.896 m^2	0.810 m^2
LD 60 C	1.411 m^2	1.274 m^2
LD 70 C	1.382 m^2	1.248 m^2
LD 80 C	1.896 m^2	1.713 m^2
LD 90 C	1.882 m^2	1.700 m^2

8. Avoid low floor elevations below 190.5mm, loosely installed flooring systems, and below floor obstructions, such as: electrical wiring chases, unusual length of computer system cables, or piping clusters.
9. The table above indicates the recommended free area based on having the supply of air grilles and perforated panels sized to handle approximately 90% of the total air volume of the units at a velocity of 2.8 to 3.1 m/s. The remaining 10% of the air flow in the conditioned space passes through cracks between the panels, cable cut-outs and other leakage areas.

Liebert air cooled environmental control system

The Liebert air cooled unit is shipped with a separate air cooled condenser. The refrigerant piping must be connected in the field and then dehydrated and charged. Other services required to make it operational are:

1. Electrical supply to the indoor unit.
2. Electrical supply to the air cooled condenser.
3. Condensate and humidifier drain lines.
4. Water source for the humidifier.

Installation of the air cooled condenser

Refer to the recommendations in the Condenser Installation, Operation and Maintenance Manual (P/N SLE CO IOM).

Installation and application guidelines (continued)

Piping considerations

All refrigeration piping should be installed with high temperature brazed joints. Prevailing good refrigeration practices should be employed for piping supports, leak testing, dehydration and charging of the refrigeration circuits. The refrigeration piping should be isolated from the building by the use of vibration isolating supports.

Traps should be installed in the hot gas lines whenever vertical risers exceed 12 metres in elevation.

These traps will collect condensed refrigerant and refrigerant oil during the off cycle of the unit and ensure the flow of refrigerant oil during operation. Inverted traps should be installed at the air cooled condenser to prevent refrigerant migration.

Application engineering approval is required when a refrigerant piping run exceeds 60 metres equivalent length or when condensers are to be located more than 9 metres below the level of the cooling coil.

When installing 4-step systems, size refrigeration pipework in accordance with standard practice, then utilise one trade size smaller on the suction lines to ensure proper oil return.

All piping below the raised floor must be located so that it offers the least resistance to air flow discharging from the system. Careful planning of the piping layout under the raised floor is required to prevent the air flow from being blocked from any portion of the room. When installing piping on the raised floor, it is recommended that the pipes be mounted side-by-side rather than stacked one above the other on support brackets. When possible, the pipes should be run parallel to the air flow. All condensate and unit drain lines should be trapped and pitched.

Liebert liquid cooled environmental control systems

Liebert liquid cooled units are shipped as a complete pre-packaged system. The refrigeration system is complete and factory charged, ready for operation. Other services required to make it operational are:

1. Electrical supply to the indoor unit.
2. Coolant source for the condensers.
3. Condensate and humidifier drain line.
4. Water source for the humidifier.

Wet traps should be installed below the raised floor to drain water leaks and prevent sub-floor flooding. A water detection system, such as the Liebert Liqui-tect system is strongly recommended.

Piping considerations

The environmental control units contain a liquid cooled condenser for each refrigeration circuit. The supply and return lines to the water/glycol cooled condensers are manifolded together to provide one supply and one return line to each unit. This will provide for routine service or emergency isolation of the unit.

All piping below the raised floor must be located so that it offers the least resistance to air flow discharging from the system. Careful planning of the piping layout under the raised floor is required to prevent the air flow being blocked from any portion of the room. When installing sub-floor piping, it is recommended that the pipes be mounted side-by-side on support brackets, rather than stacked one above the other. Whenever possible the pipes should run parallel to the air flow. All condensate and unit drain lines should be trapped and pitched.

When required, the liquid cooled condensers may be cleaned by removing the heads and rodding the internal tubes. The condensers may also be acid cleaned; however, acid is generally not permitted in critical locations.

Water cooled

When the water source for the condenser is of poor quality, it is good practice to provide cleanable filters in the supply line. These filters will trap particles in the water supply and extend the service life of the water cooled condensers.

Consideration of the minimum water temperature to be supplied from the cooling tower, or other source, will determine the need to insulate the condenser supply and return lines. Insulation will prevent condensation on the water lines.

Glycol cooled

The glycol source for the condensers is provided from a drycooler that is piped directly to the indoor unit.

Consideration of the minimum glycol temperature to be supplied from the drycooler will determine the need to insulate the condenser supply and return lines. Insulation will prevent condensation on the glycol lines in low ambient temperature conditions.

Drycooler location

Drycoolers should be located for maximum security and maintenance accessibility. Avoid ground-level sites with public access or areas which are prone to heavy snow or ice accumulations. To ensure an adequate air supply, it is recommended that drycoolers be located in a clean air area, away from loose dirt and foreign matter that could clog the coil. In addition, drycoolers must not be located in the vicinity of steam, hot air or fume exhausts. Also, drycoolers should be located no closer than 1 metre from a wall, obstruction or adjacent unit.

Locate the pump near the drycooler, and the expansion tank at the highest point in the system.

Drycooler installation

Refer to the recommendations in the Drycooler Installation, Operation and Maintenance Manual (P/N SLE DC IOM).

Installation and application guidelines (continued)

Glycol/inhibitor solution

The percentage of glycol to water will be determined by the outdoor ambient temperature in which the system is operating. Just as critical, is the inhibitor used with the glycol.

Commercial ethylene glycol, when pure, is generally less corrosive to the common metals of construction than water itself. It will however, assume the corrosive properties of the water from which it is prepared and may become increasingly corrosive with use if not properly inhibited.

Proper inhibitor maintenance must be performed in order to prevent corrosion of the glycol system. We recommend chemical treatment using a proprietary inhibitor.

Glycool application notes

When using a glycol solution as a heat rejection and/or cooling fluid for heat transfer, special consideration must be given to pipe sizing and pump selections to ensure proper operation. The viscosity and therefore the pressure drop of glycol solutions depend heavily on two factors. They are the concentration of the solution (30%, 40%, etc.) and the temperature of the solution.

When using glycol for the Glycool systems, a concentration of 40% is normally used. This provides freeze protection to approximately -26°C; as compared to water, 40% glycol at 43°C has a pressure drop approximately 15% greater for equivalent flow rates in steel pipe. When the temperature of the 40% solution falls to a 4.4°C level, the pressure drop is 41% greater than water. The exact amount of increase depends on the pipe size and type, fluid velocity, temperature and concentration. The glycol fluid supplier should be consulted for complete information.

The pressure drop information for Glycool systems is calculated for 40% glycol at 4.4°C average solution temperature. This will be the condition of maximum pressure drop at the design flow rates for the Glycool units and drycoolers.

When selecting a pump for the glycol solutions, the performance of a centrifugal pump is affected by the viscosity and specific gravity of the fluid. Glycol in the range of 20% to 50% concentration, and temperatures of 4.4°C to 43°C affects the performance curves less than 1%, and standard water pump curves can be used without modification.

When using the Glycool system, all glycol piping inside the building should be insulated to prevent sweating on the piping during the econo-cycle when the fluid temperature drops to 4.4°C.

These considerations are included in the Liebert Glycool standard system design. The pump selections indicated, at the design flow rate, are tabulated with the total head capability of the pump. This value should be deducted from the unit and drycooler pressure drop at 40% and 4.4°C. The result is the amount of head available for field piping pressure drops. Field piping pressure drops, when calculated at 40%, 4.4°C glycol solution, less than or equal to the available pressure from the pump, do not require a special factory pump selection.

When the anticipated field pressure drops exceed the available, or multiple units are connected by a common set of risers to a large roof mounted drycooler.

Liebert chilled water environmental control system

The Liebert chilled water environmental control system for terminal use in chilled water systems is shipped from the factory with all controls, including valves, factory installed. Other services required to make it operational are:

1. Electrical supply to the unit.
2. Chilled water source.
3. Condensate and humidifier drain lines.
4. Water source for the humidifier.

Piping considerations

It is recommended that manual service shut-off valves be installed at the supply and return line of each unit.

Consideration of the minimum water temperature to be supplied from the chiller will determine the need to insulate the supply and return lines. Insulation will prevent condensation on the chilled water lines.

Wet traps should be installed below the raised floor to drain water leaks and prevent sub-floor flooding. The installation of a water detection system, such as the Liebert Liqui-tect system is strongly recommended.

All piping below the raised floor must be located so that it offers the least resistance to air flow discharging from the system. Careful planning of the piping layout under the raised floor is required to prevent the air flow being blocked from any portion of the room. When installing piping on the sub-floor, it is recommended that the pipes be mounted side-by-side on support brackets rather than stacked one above the other. Whenever possible the pipes should run parallel to the air flow. All condensate and unit drain lines should be trapped and pitched.

Air cooled data

*Gross Capacities kW**		*LD/LU 20A*	*LD/LU 30A*	*LD/LU 37A*	*LD/LU 46A*	*LD/LU 58A*	*LD/LU 67A*	*LD/LU 99A*
26°C DB, 50% RH	TOTAL	21.9	32.7	37.8	50.2	60.5	73.3	96.3
	SENSIBLE	18.9	29.3	34.3	50.2	57.0	73.3	86.1
24°C DB, 50% RH	TOTAL	20.8	31.0	35.9	48.0	61.4	70.1	91.9
	SENSIBLE	18.5	28.5	33.4	48.0	61.4	70.1	84.1
24°C DB, 45% RH	TOTAL	21.8	32.5	38.0	48.0	61.4	70.1	92.8
	SENSIBLE	21.8	32.5	38.0	48.0	61.4	70.1	92.8
22°C DB, 50% RH	TOTAL	19.8	29.5	36.4	45.9	58.7	67.2	87.4
	SENSIBLE	18.0	27.8	36.4	45.9	58.7	67.2	82.0

Fan Section - Variable Pitch, Two (2) Belt Drive Package

Air Volume	m^3/h	5780	8500	10200	14280	17340	20400	25500
Ext. Static Press.	Pa	75	75	75	75	75	75	75
Fan Motor	kW @ 400V	0.75	1.1	2.2	3.0	4.0	5.5	7.5
Quantity of Fans		1	1	1	2	2	2	3

Evaporator Coil - A-Frame - Copper Tube/Aluminium Fin

Face Area	m^2	1.16	1.32	1.32	2.06	2.06	2.06	2.72
Rows of Coil		3	4	4	4	4	4	4
Face Velocity	m/s	1.30	1.72	2.07	1.87	2.29	2.70	2.60

Reheat Section

Electric Reheat - Two (2) Stage, Fin Tubular, Phase Balanced								
Capacity	kW @ 400V	15	15	15	25	25	25	30
Hot Water Reheat - Capacity @ 80°C EWT, 24°C EAT **								
Capacity	kW	14.3	16.4	18.2	30.5	36.5	-	-
Flow Rate	l/s	0.31	0.31	0.31	0.50	0.56	-	-
Pressure Drop	kPa	32.6	32.6	32.6	22.5	31.7	-	-

*Humidifier Section ****

Infrared Humidifier								
Capacity	kg/h	5	10	10	10	10	10	10
Rating	kW @ 400V	4.8	9.6	9.6	9.6	9.6	9.6	9.6

Filter Section

30% Eff. - 100mm Depth based on Eurovent 4-5 (EU4)				(60% N.B.S. Dust Spot - 96% N.B.S. Cottrell)				
Effective Surface Area	m^2	8.08	8.08	8.08	10.78	10.78	10.78	13.50
65% Eff. - 150mm Depth based on Eurovent 4-5 (EU7)				(65% N.B.S. Dust Spot - 99% N.B.S. Cottrell)				
Effective Surface Area	m^2	15.33	15.33	15.33	20.44	20.44	20.44	25.50
20% Eff. - Prefilter - 50mm Depth based on Eurovent 4-5 (EU3)				(25% N.B.S. Dust Spot - 95% N.B.S. Cottrell)				
Effective Surface Area	m^2	3.90	3.90	3.90	5.20	5.20	5.20	6.50

* For nett capacities deduct fan motor heat kW. Capacities are quoted for R22. Unit air flow is quoted for standard configuration, with a clean EU4 filter. R22 capacities are approximately the same as R407C capacities + 5%. Consult Liebert Applications Engineers for specific details.

** Optional 2-row hot water reheat coils available for increased reheat capacity. EWT=Entering Water Temperature, EAT=Entering Air Temperature.

*** Electrode boiler steam humidifiers are available as an optional extra. Consult applications engineers for further details.

Air cooled data (continued)

*Condenser (Standard 32.0°C Ambient) **

		LD/LU 20A	*LD/LU 30A*	*LD/LU 37A*	*LD/LU 46A*	*LD/LU 58A*	*LD/LU 67A*	*LD/LU 99A*
Model No. (1 per unit)		HBA33	HBA49	HBA49	HBA74	HBA74	HBA87	TBA
No.of Fans		2	2	2	3	3	3	TBA
Weight (Nett)	kg	90	126	126	185	185	215	TBA
Liquid Line Size	mm	16	22	22	22	22	28	TBA
Hot Gas Size	m	22	28	28	28	28	35	TBA
Safety Valves - Spring Loaded								
Outlet Connection	Inch	⅜ flared	⅜ flared	⅜ flared	⅜ flared	⅜ flared	⅜ flared	⅜ flared
Setting	kPa	2758	2758	2758	2758	2758	2758	2758

Connection Sizes

Liquid Line Size	Inch	½	½	½	½	⅝	⅝	⅝
Hot Gas Line Size	Inch	⅝	⅝	⅝	⅞	1⅛	1⅛	1⅛
Infrared Humidifier	Inch	¼	¼	¼	¼	¼	¼	¼
Condensate Drain	FPT Inch	¾	¾	¾	¾	¾	¾	¾
Steam Reheat	MPT Inch	½	½	½	¾	¾	-	-
Hot Water Reheat	Inch	⅝	⅝	⅝	⅞	⅞	-	-
Electrode Boiler Steam Humidifier	MPT Inch	½	½	½	½	½	½	½

Weight

	kg	794	821	853	1002	1048	1211	1361

TBA = To be advised

* Data shown applies to the standard condenser selections. For optional condenser selections, refer to the Condenser Technical Manual (P/N SLE CO TDM).
FPT = Female Pipe Thread
MPT = Male Pipe Thread

Water cooled data

*Gross capacities **								
		LD/LU 20W	***LD/LU 30W***	***LD/LU 37W***	***LD/LU 46W***	***LD/LU 58W***	***LD/LU 67W***	***LD/LU 99W***
26°C DB, 50% RH	TOTAL	22.5	35.6	42.5	53.0	66.0	76.2	105.9
	SENSIBLE	19.1	30.4	36.0	48.7	59.0	68.1	89.7
24°C DB, 50% RH	TOTAL	21.2	33.6	40.0	50.2	62.2	71.9	99.9
	SENSIBLE	18.6	29.5	35.0	47.4	57.3	66.2	87.3
24°C DB, 45% RH	TOTAL	22.2	35.1	42.2	53.1	66.5	77.5	99.9
	SENSIBLE	22.2	35.1	42.2	53.1	66.5	77.5	99.9
22°C DB, 50% RH	TOTAL	20.1	31.7	37.7	50.6	58.6	68.0	94.5
	SENSIBLE	18.1	28.7	34.0	50.6	55.6	64.3	84.9

Fan Section - Variable Pitch, Two (2) Belt Drive Package

Air Volume	m^2/h	5780	8500	10200	14280	17340	20400	25500
Ext. Static Press.	Pa	75	75	75	75	75	75	75
Fan Motor	kW @ 400V	0.75	1.1	2.2	3.0	4.0	5.5	7.5
Quantity of Fans		1	1	1	2	2	2	3

Evaporator Coil - A-Frame - Copper Tube/Aluminium Fin

Face Area	m^2	1.16	1.32	1.32	2.06	2.06	2.06	2.72
Rows of Coil		3	4	4	4	4	4	4
Face Velocity	m/s	1.30	1.72	2.07	1.87	2.29	2.70	2.60

Reheat Section

Electric Reheat - Two (2) Stage, Fin Tubular, Phase Balanced								
Capacity	kW @ 400V	15	15	15	25	25	25	30
Hot Water Reheat - Capacity @ 80°C EWT, 24°C EAT**								
Capacity	kW	14.3	16.4	18.2	30.5	36.5	-	-
Flow Rate	l/s	0.3	0.3	0.3	0.5	0.6	-	-
Pressure Drop	kPa	32.6	32.6	32.6	22.5	31.7	-	-
Hot Gas Reheat/Electric Reheat Combination - 2 Stage ***								
Hot Gas Capacity	kW *	6	7	8	12	14	14	-
Electric Capacity	kW *	5	5	5	8	8	8	-
Total Capacity	kW *	11	12	13	20	22	22	-

*Humidifier Section *****

Infrared Humidifier								
Capacity	kg/h	5	10	10	10	10	10	10
Rating	kW @ 400V	4.8	9.6	9.6	9.6	9.6	9.6	9.6

* For nett capacities deduct fan motor heat kW. Capacities are quoted for R22. Unit air flow is quoted for standard configuration, with a clean EU4 filter. R22 capacities are approximately the same as R407C capacities + 5%. Consult Liebert Applications Engineers for specific details.

** Optional 2-row hot water reheat coils available for increased reheat capacity. EWT=Entering Water Temperature, EAT=Entering Air Temperature.

*** Not available on upflow models

**** Electrode boiler steam humidifiers are available as an optional extra. Consult Liebert Applications Engineers for details.

Water cooled data (continued)

Filter Section		*LD/LU 20W*	*LD/LU 30W*	*LD/LU 37W*	*LD/LU 46W*	*LD/LU 58W*	*LD/LU 67W*	*LD/LU 99W*
30% Eff. - 100mm Depth based on Eurovent 4-5 (EU4)				(60% NBS Dust Spot - 96% NBS Cottrell)				
Effective Surface Area	m^2	8.08	8.08	8.08	10.78	10.78	10.78	13.50
65% Eff. - 150mm Depth based on Eurovent 4-5 (EU7)				(65% NBS Dust Spot - 99% NBS cottrell)				
Effective Surface Area	m^2	15.33	15.33	15.33	20.44	20.44	20.44	25.50
20% Eff - Prefilter - 50mm Depth based on Eurovent 4-5 (EU3)				(25% NBS Dust Spot - 95% NBS Cottrell)				
Effective Surface Area	m^2	3.90	3.90	3.90	5.20	5.20	5.20	6.50

*Water Regulating Valves - Single Seated, Head Pressure Controlled **

Size	Inch	1	1	1	1	1¼	1¼	1¼

Condenser Water Requirements @ THR for 24°C/50%RH

24°C EWT/40°C cond. temp	l/s	0.60	1.00	1.20	1.40	1.40	1.70	2.16
Pressure Drop	kPa	9.0	16.5	23.8	18.8	14.8	20.3	15.8

Safety Valves - Spring Loaded

Outlet Connection	Inch	⅜ flared	⅜ flared	⅜ flared	⅜ flared	⅜ flared	⅜ flared	⅜ flared
Setting	kPa	2758	2758	2758	2758	2758	2758	2758

Connection Sizes

Condenser Water	Inch	1⅝	1⅝	2⅛	2⅛	2⅛	2⅛	2⅛
Infrared Humidifier	Inch	¼	¼	¼	¼	¼	¼	¼
Condensate drain	FPT Inch	¾	¾	¾	¾	¾	¾	¾
Hot Water Reheat	Inch	⅝	⅝	⅝	⅞	⅞	-	-
Electrode Boiler Steam Humidifier	MPT Inch	½	½	½	½	½	½	½

Weight

	kg	708	740	889	912	1075	1093	1551

* Single-seated, two-way valve
THR = Total Heat Rejection
EWT = Entering Water Temperature
EAT = Entering Air Temperature
FPT = Female Pipe Thread
MPT = Male Pipe Thread

Glycol cooled data

*Gross Capacities kW**								
		LD/LU 20G	*LD/LU 30G*	*LD/LU 37G*	*LD/LU 46G*	*LD/LU 58G*	*LD/LU 67G*	*LD/LU 99G*
26°C DB, 50% RH	TOTAL	19.9	30.6	36.7	49.3	61.0	69.1	94.4
	SENSIBLE	18.2	30.6	33.9	49.3	61.0	69.1	85.6
24°C DB, 50% RH	TOTAL	19.0	29.4	37.0	47.2	58.4	66.3	88.3
	SENSIBLE	17.8	29.4	37.0	47.2	58.4	66.3	82.7
24°C DB, 45% RH	TOTAL	19.0	29.4	37.0	47.2	58.4	66.3	89.6
	SENSIBLE	19.9	29.4	37.0	47.2	58.4	66.3	89.6
22°C DB, 50% RH	TOTAL	19.1	28.1	35.4	45.1	55.9	63.6	86.6
	SENSIBLE	19.1	28.1	35.4	45.1	55.9	63.6	86.6

Fan Section - Variable Pitch, Two (2) Belt Drive Package

Air Volume	m^3/h	5780	8500	10200	14280	17340	20400	25500
Ext. Static Press.	Pa	75	75	75	75	75	75	75
Fan Motor	kW @ 400V	0.75	1.1	2.2	3.0	4.0	5.5	7.5
Quantity of Fans		1	1	1	2	2	2	3

Evaporator Coil - A-Frame - Copper Tube Aluminium Fins

Face Area	m^2	1.16	1.32	1.32	2.06	2.06	2.06	2.72
Rows of Coil		3	4	4	4	4	4	4
Face Velocity	m/s	1.30	1.72	2.07	1.87	2.29	2.70	2.60

Reheat Section

Electric Reheat - Two (2) Stage, Fin Tubular, Phase Balanced								
Capacity	kW @ 400V	15	15	15	25	25	25	30
Hot Water Reheat - Capacity @ 80°C EWT, 24°C EAT **								
Capacity	kW	14.3	16.4	18.2	30.5	36.5	-	-
Flow Rate	l/s	0.3	0.3	0.3	0.5	0.6	-	-
Pressure Drop	kPa	32.6	32.6	32.6	22.5	31.7	-	-
Hot Gas Reheat/Electric Reheat Combination - 2 Stage ***								
Hot Gas Reheat Capacity	kW	6	7	8	12	14	14	-
Electric Reheat Capacity	kW	5	5	5	8	8	8	-
Total Reheat Capacity	kW	11	12	13	20	22	22	-

*Humidifier Section ******

Infrared Humidifier								
Capacity	kg/h	5	10	10	10	10	10	10
Rating	kW @ 400V	4.8	9.6	9.6	9.6	9.6	9.6	9.6

* For nett capacities deduct fan motor heat kW. Capacities are quoted for R22. Unit air flow is quoted for standard configuration, with a clean EU4 filter. R22 capacities are approximately the same as R407C capacities + 5%. Consult Liebert Applications Engineers for specific details.

** Optional 2-row hot water reheat coils available for increased reheat capacity. EWT=Entering Water Temperature, EAT=Entering Air Temperature.

*** Not available on upflow models

**** Electrode boiler steam humidifiers are available as an optional extra. Consult Liebert Applications Engineers for further assistance.

Glycol cooled data (continued)

Filter Section		*LD/LU 20G*	*LD/LU 30G*	*LD/LU 37G*	*LD/LU 46G*	*LD/LU 58G*	*LD/LU 67G*	*LD/LU 99G*
Standard 30% Eff. - 100mm Depth based on Eurovent 4-5 (EU4)				(60% N.B.S. Dust Spot - 96% N.B.S. Cottrell)				
Effective Surface Area	m^2	8.08	8.08	8.08	10.78	10.78	10.78	13.50
Optional 65% Eff. - 150mm Depth based on Eurovent 4-5 (EU7)				(65% N.B.S. Dust Spot - 99% N.B.S. Cottrell)				
Effective Surface Area	m^2	15.33	15.33	15.33	20.44	20.44	20.44	25.50
Optional 20% Eff. - Prefilter - 50mm Depth based on Eurovent 4-5 (EU3)				(25% N.B.S. Dust Spot - 95% N.B.S. Cottrell)				
Effective Surface Area	m^2	3.90	3.90	3.90	5.20	5.20	5.20	6.50

*Drycooler Aluminium Cabinet (Standard Selection 32.0°C Ambient) **

Model No. (1 per unit)		DSL018	DSL022	DSL028	DSL040	DSL050	DSL050	DSL070
Approx. Weight (each)	kg	130	140	180	210	275	275	340
Quantity of Fans		2	2	3	2	3	3	3
Connection Size (supply/return)	Inch	1½	1½	1½	1½	2	2	2
Expansion Tank	Litres	33.3	33.3	33.3	33.3	33.3	33.3	33.3

Connection Sizes

Glycol Condenser	Inch	1⅝	1⅝	1⅝	2⅛	2⅛	2⅛	2⅛
Infrared Humidifier	Inch	¼	¼	¼	¼	¼	¼	¼
Condensate Drain	FPT Inch	¾	¾	¾	¾	¾	¾	¾
Hot Water Reheat	Inch	⅝	⅝	⅝	⅞	⅞	-	-
Electrode Boiler Steam Humidifier	MPT Inch	½	½	½	½	½	½	½

Pressure Drops @ THR for 24°C/50%RH (25% Glycol)

System Flowrate	l/s	1.1	1.7	2.3	2.3	3.6	3.6	4.9
Internal Glycol Volume **	Litres	7.5	7.5	9.5	17.0	21.0	21.0	24.1
Unit Pressure Drop	kPa	24.6	30.5	48.2	22.6	20.5	45.8	98.5
Drycooler Pressure Drop	kPa	10.0	28.5	46.2	22.0	35.0	35.0	18.2

Weight

	kg	708	739	889	912	1075	1093	1551

* Horizontal Air Flow is standard, Vertical Air Flow is optional. Specifications are those of standard selections. For further details on drycooler selections, refer to the Drycooler Technical Manual (P/N SLE DC TDM).

** Approximate
FPT = Female Pipe Thread
MPT = Male Pipe Thread

Glycool data

*Gross Capacities kW **							
		LD/LU 20E	***LD/LU 30E***	***LD/LU 37E***	***LD/LU 46E***	***LD/LU 58E***	***LD/LU 67E***
26°C DB, 50% RH	TOTAL	19.9	30.6	36.7	49.3	61.0	69.1
	SENSIBLE	18.2	30.6	33.9	49.3	61.0	69.1
24°C DB, 50% RH	TOTAL	19.0	29.4	37.0	47.2	58.4	66.3
	SENSIBLE	17.8	29.4	37.0	47.2	58.4	66.3
24°C DB, 45% RH	TOTAL	19.0	29.4	37.0	47.2	58.4	66.3
	SENSIBLE	19.9	29.4	37.0	47.2	58.4	66.3
22°C DB, 50% RH	TOTAL	19.1	28.1	35.4	45.1	55.9	63.6
	SENSIBLE	19.1	28.1	35.4	45.1	55.9	63.6

Econo-coil Gross Sensible Cooling Capacity Data - kW (LD Models)***

24°C DB, 45% RH	21.9	29.1	33.2	47.8	54.9	60.5

Econo-coil Gross Sensible Cooling Capacity Data kW (LU Models)***

24°C DB, 45% RH	21.1	28.0	31.7	49.5	57.0	61.9

Evaporator Coil - A-Frame Copper Tube/Aluminium Fin

Face Area	m^2	1.16	1.32	1.32	2.06	2.06	2.06
Rows of Coil		3	4	4	4	4	4
Face Velocity	m/s	1.30	1.72	2.07	1.87	2.29	2.70

Fan Section - Variable Pitch

Air Volume	m^3/h	5780	8500	10200	14280	17340	20060
Ext. Static Press.	Pa	75	75	75	75	75	75
Fan Motor	kW @ 400V	1.1	1.5	2.2	4.0	5.5	7.5
Quantity of Fans		1	1	1	2	2	2

Reheat Section

Electric Reheat - Two (2) Stage, Fin Tubular, Phase Balanced							
Capacity*	kW @ 400V	15	15	15	25	25	25

Humidifier Section **

Infrared Humidifier							
Capacity	kg/h	5	10	10	10	10	10
Rating	kW @ 400V	4.8	9.6	9.6	9.6	9.6	9.6

Filter Section

30% Eff. Standard 100mm depth based on Eurovent 4-5 (EU4)					(45% N.B.S. Dust Spot - 95% N.B.S. Cottrell)		
Depth	mm	102	102	102	102	102	102
Eff. Surface Area	m^2	7.08	7.08	7.08	9.03	9.64	9.64

* For nett capacities deduct fan motor heat kW. Capacities are quoted for R22. Unit air flow is quoted for standard configuration, with a clean EU4 filter. R22 capacities are approximately the same as R407C capacities + 5%. Consult Liebert Applications Engineers for specific details.

** Electrode boiler steam humidifiers are available as an optional extra. Consult Liebert Applications Engineers for specific details.

*** EFT = Entering Fluid Temperature at 7.2°C. Glycol temperature rise 5.6°C. 40% Glycol

Glycool data (continued)

Three Way Valve		*LD/LU 20E*	*LD/LU 30E*	*LD/LU 37E*	*LD/LU 46E*	*LD/LU 58E*	*LD/LU 67E*
Valve Actuator		MODULATING	MODULATING	MODULATING	MODULATING	MODULATING	MODULATING
Action		EQUAL PERCENTAGE	EQUAL PERCENTAGE	EQUAL PERCENTAGE	EQUAL PERCENTAGE	EQUAL PERCENTAGE	EQUAL PERCENTAGE
Valve Cv		13.4	13.4	41.0	41.0	41.0	41.0
Valve Size	Inch	1¼	1¼	2	2	2	2

*Drycooler (Standard Selection 32°C Ambient)**

Model No.		DSL018	DSL022	DSL028	DSL040	DSL050	DSL050
Approx. Weight	kg	13	140	180	210	275	275
Quantity of Fans		2	2	3	2	3	3
Pipe Connection Size	Inch	1½	1½	1½	1½	2	2
Expansion Tank	Litres	33.3	33.3	33.3	33.3	33.3	33.3

Safety Valves - Spring Loaded

Outlet Connections	Inch	⅜ flared	⅜ flared	⅜ flared	⅜ flared	⅜ flared	⅜ flared
Setting	kPa	2758	2758	2758	2758	2758	2758

Connection Sizes

Glycol Condenser	Inch	1⅝	1⅝	1⅝	2⅛	2⅛	2⅛
Infrared Humidifier	Inch	¼	¼	¼	¼	¼	¼
Condensate Drain	FPT	¾	¾	¾	¾	¾	¾

Pressure Drops at 25% Glycol, 4.4°C Average Temperature

System Flowrate	l/s	1.5	1.5	2.2	2.2	3.0	3.0
Int. Glycol Volume **	Litres	32.0	32.0	38.0	51.0	57.0	57.0
Unit Pressure Drop-(Max) kPa	4 Row (LD)	43.9	26.4	44.9	16.2	39.2	53.5
Drycooler Press. Drop	kPa	15.5	25.5	42.5	23.5	32.2	32.2

Weight

	kg	821	853	1002	1048	1211	1229

* Horizontal Air Flow is standard, Vertical Air Flow is optional. Specifications are those of standard selections. For further details on drycooler selections, refer to the Drycooler Technical Manual (P/N SLE DC TDM).

** Approximate

FPT = Female Pipe Thread

Chilled water data

*Capacity Data kW** *(Based on 7.2°C EWT, 5.6°C Temperature Rise)*								
		LD/LU 30C	***LD/LU 40C***	***LD/LU 50C***	***LD/LU 60C***	***LD/LU 70C***	***LD/LU 80C***	***LD/LU 90C***
26°C DB, 50% RH								
Total		41.6	54.8	68.0	82.7	103.1	115.4	144.9
Sensible		32.1	40.9	48.2	62.2	73.5	85.7	102.4
Flow Rate	l/s	1.8	2.30	2.90	3.50	4.40	4.90	6.20
Pressure Drop	kPa	47.2	78.3	72.9	77.8	57.5	67.4	-
24°C DB, 50% RH								
Total		33.5	44.1	54.9	66.7	83.3	92.8	116.9
Sensible		28.9	36.6	42.9	55.8	65.5	76.7	91.2
Flow Rate	l/s	1.4	1.90	2.30	2.80	3.50	4.00	5.00
Pressure Drop	kPa	31.8	52.7	49.4	52.5	38.8	45.2	81.5
24°C DB, 45% RH								
Total		30.3	40.1	49.6	60.7	75.3	84.4	105.7
Sensible		30.3	37.6	43.6	57.5	66.7	78.9	92.7
Flow Rate	l/s	1.3	1.70	2.10	2.60	3.20	3.60	4.50
Pressure Drop	kPa	26.2	44.1	41.2	44.1	32.3	37.8	67.8
22°C DB, 50% RH								
Total		26.1	34.6	43.0	52.5	65.4	72.8	91.6
Sensible		26.1	32.5	37.7	49.6	57.7	68.1	80.2
Flow Rate	l/s	1.1	1.50	1.80	2.20	2.80	3.10	3.90
Pressure Drop	kPa	20.0	33.5	31.8	33.8	24.9	28.7	52.2

Fan Section - Variable Pitch

Air Volume	m^3/h	8924	10284	10029	15810	15470	21250	21080
Ext. Static Press.	Pa	75	75	75	75	75	75	75
Fan Motor	kW @ 400V	1.5	2.2	3.0	5.5	5.5	7.5	7.5
Quantity of Fans		1	1	1	2	2	2	2

Chilled Water Coil - A-Frame Copper Tube/Aluminium Fin

Face Area	m^2	1.08	1.08	1.08	1.70	1.70	2.30	2.30
No. of Rows		3	4	6	4	6	4	6
Face Velocity	m/s	2.2	2.5	2.5	2.4	2.4	2.5	2.4

Chilled Water Controls

Valve Actuator		Modulating	Modulating	Modulating	Modulating	Modulating	Modulating	Modulating
Action		Equal Percentage	Equal Percentage	Equal Percentage	Equal Percentage	Equal Percentage	Equal Percentage	Equal Percentage
Valve Body **		3-Way	3-Way	3-Way	3-Way	3-Way	3-Way	3-Way
Valve Cv	kPa	10.0	13.4	27.5	27.5	41.0	41.0	41.0
Valve Size	Inch	1	1¼	1½	1½	2	2	2

* For nett capacities deduct fan motor heat kW. Unit air flow is quoted for standard configuration, with a clean EU4 filter.

** Two-way valve available as option - consult Liebert Applications Engineers

Chilled water data (continued)

*Humidifier Section **

Infrared Humidifier		*LD/LU 30C*	*LD/LU 40C*	*LD/LU 50C*	*LD/LU 60C*	*LD/LU 70C*	*LD/LU 80C*	*LD/LU 90C*
Capacity	kg/h	5	5	5	10	10	10	10
Rating	kW @ 400V	4.8	4.8	4.8	9.6	9.6	9.6	9.6
Reheat Section								
Electric Reheat - Two (2) Stage, Fin Tubular, Phase Balanced								
Capacity **	kW @ 400V	15	15	15	25	25	25	25
Hot Water Reheat - Capacity @ 80°C EWT, 24°C EAT								
Capacity **	kW	13.5	16.5	16.5	24.1	27.7	36.3	36.3
Flow Rate	l/s	0.3	0.5	0.5	0.4	0.6	0.5	0.5
Pressure Drop	kPa	32.4	82.4	82.4	14.4	54.1	22.5	22.5

Filter Section

30% Eff. - 100mm Depth Based on Eurovent 4-5 (EU4)					(60% N.B.S. Dust Spot - 95% N.B.S. Cottrell)			
Eff. Surface Area	m^2	8.08	8.08	8.08	10.13	10.78	10.78	10.78
65% Eff. - 150mm Depth Based on Eurovent 4-5 (EU7)					(65% N.B.S. Dust Spot - 99% N.B.S. Cottrell)			
Eff. Surface Area	m^2	15.33	15.33	15.33	19.14	20.44	20.44	20.44
20% Eff. - Prefilter - 50mm Depth Based on Eurovent 4-5 (standard) (EU3)					(25% N.B.S. Dust Spot - 95% N.B.S. Cottrell)			
Eff. Surface Area	m^2	3.90	3.90	3.90	4.83	5.02	5.02	5.02

Connection Sizes

Chilled Water	Inch	1⅛	1⅜	1⅝	1⅝	2⅛	2⅛	2⅛
Infrared Humidifier	Inch	¼	¼	¼	¼	¼	¼	¼
Condensate Drain	FPT Inch	¾	¾	¾	¾	¾	¾	¾
Hot Water Reheat	Inch	⅝	⅝	⅝	⅞	⅞	⅞	⅞
Electrode Boiler Steam Humidifier	MPT Inch	½	½	½	½	½	½	½

Weight

	kg	413	429	456	578	626	733	801

* Electrode boiler steam humidifiers are available as an optional extra.
** For optional or non-standard drive settings/motor kW consult Liebert Applications Engineers.
MPT = Male Pipe Thread
FPT = Female Pipe Thread
EWT=Entering Water Temperature
EAT=Entering Air Temperature.

Unit sound data

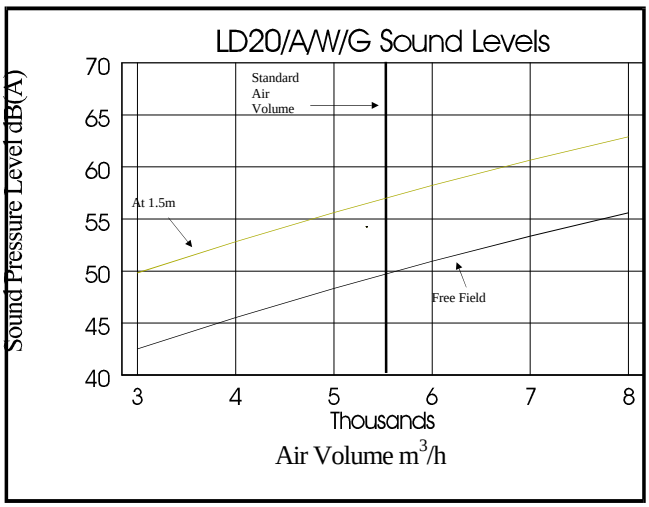

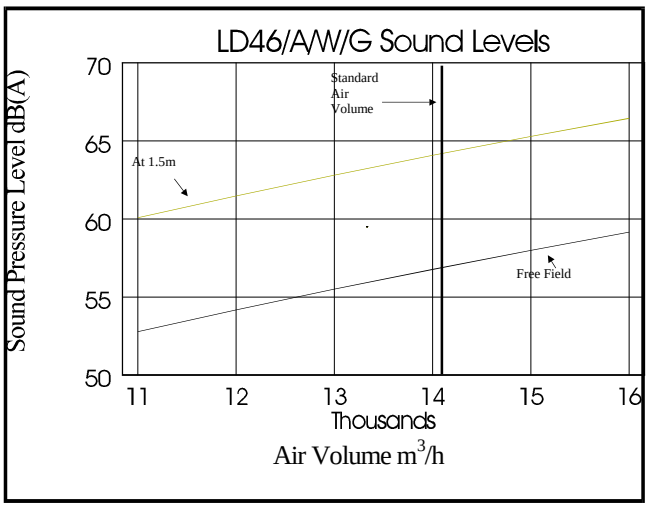

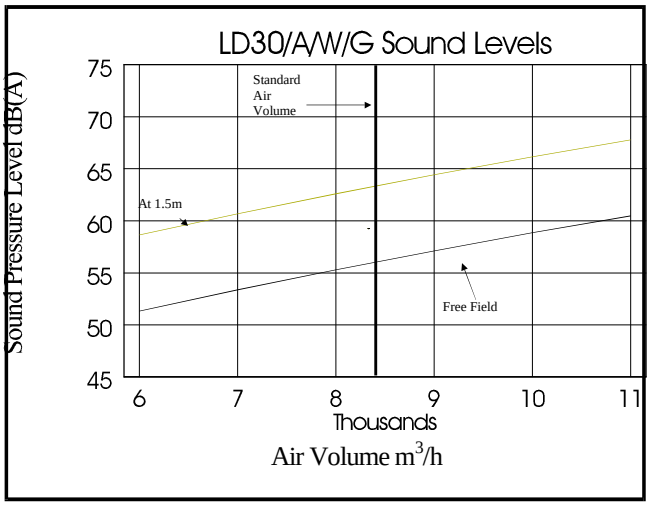

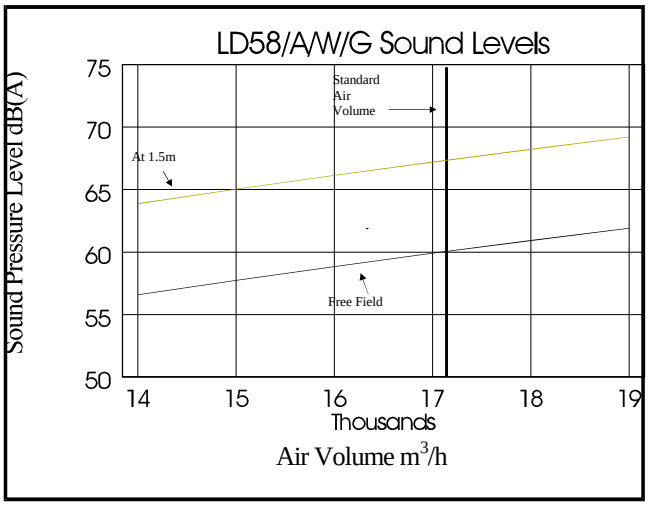

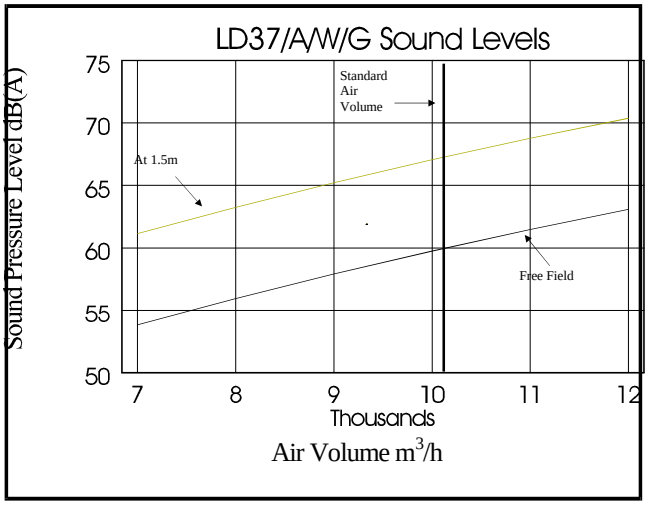

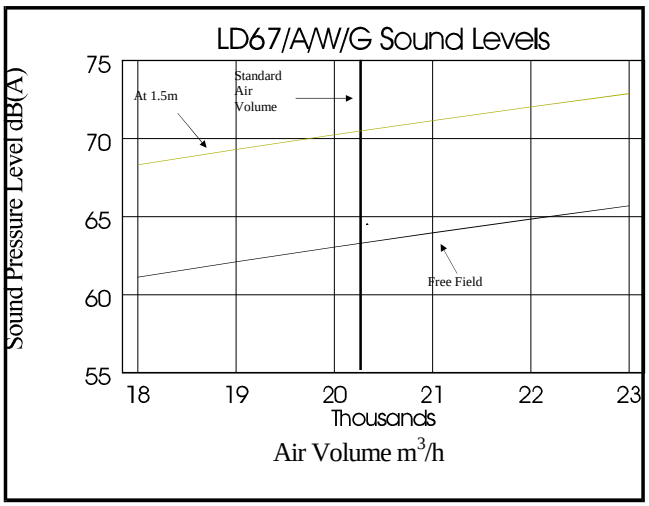

Notes:

1. Sound pressure levels (at 1.5m) were measured in a room with a reverberation time of 0.476 seconds and a net volume of 270m^3.
2. Sound pressure levels are also applicable to units in the upflow configuration provided that the discharge is into a ceiling void or ducted away.
3. For Glycool machines, add 2dB(A) to the total dB(A) figure (A/W/G range).
4. For unit standard air volumes and capacities, refer to the unit capacity section of this manual.
5. For more information on air volumes other than standard, consult the Liebert Applications Engineering Department.
6. The above graphs are for a constant 75 Pascals external static pressure, all figures are quoted at standard operating conditions.
7. Free field sound pressure levels are calculated from the dBX and dBY Sound Power components.

Unit sound data (continued)

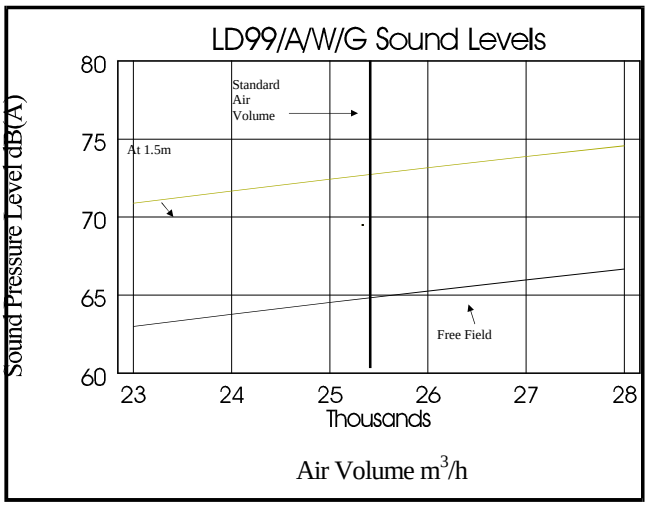

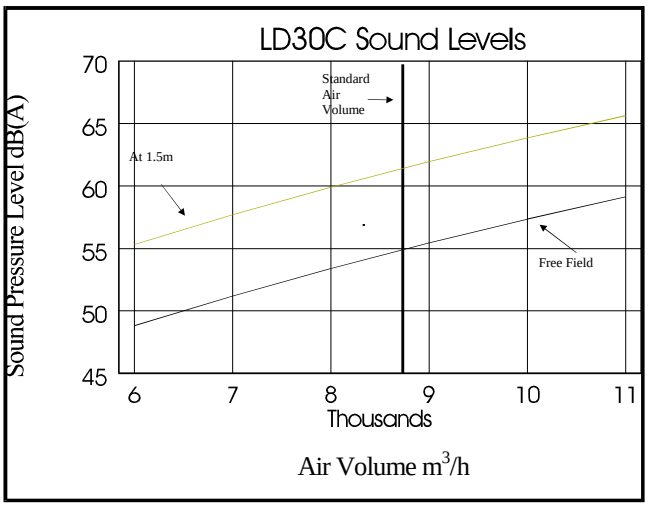

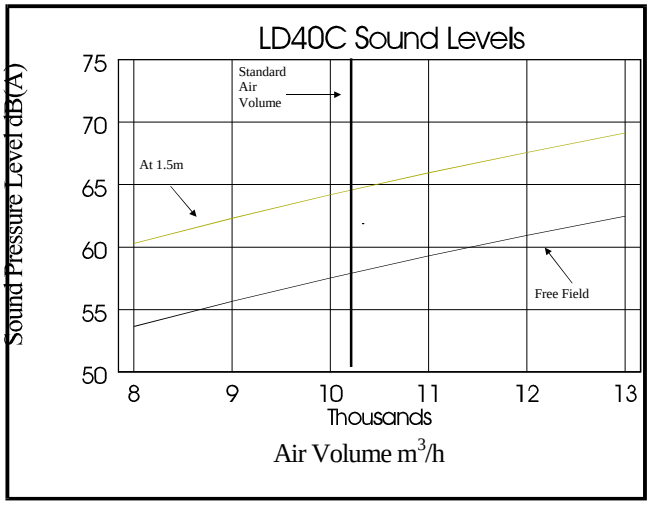

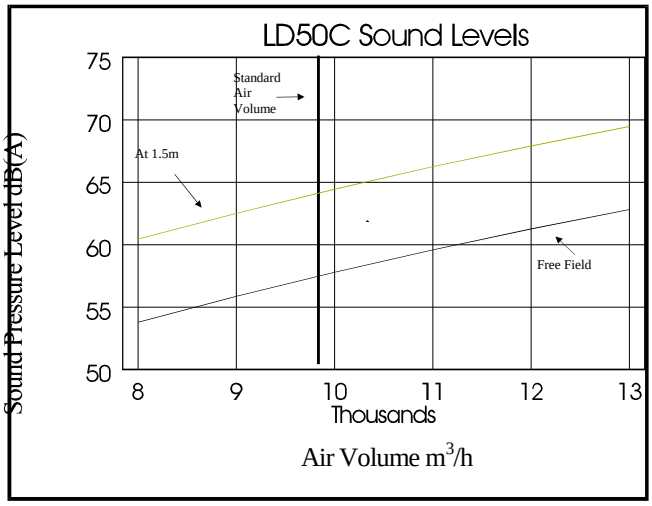

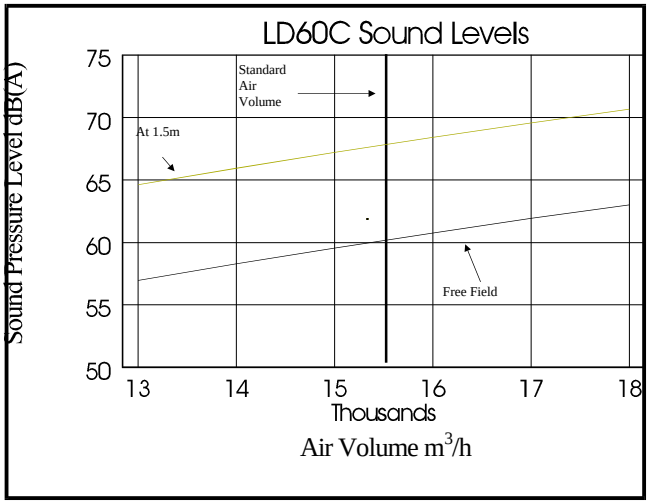

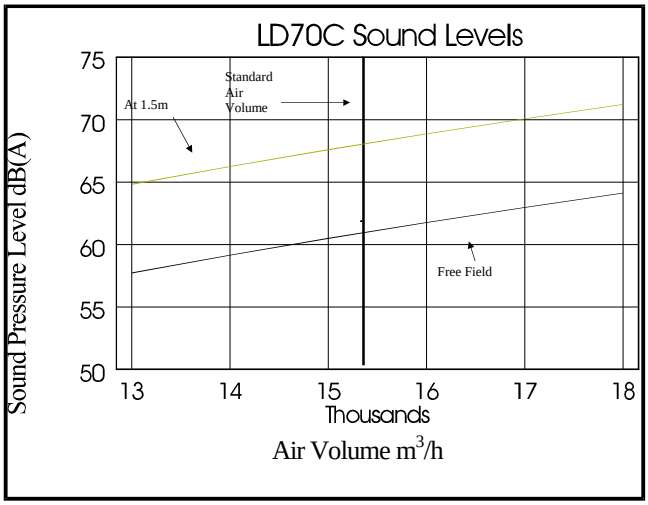

Notes:

1. Sound pressure levels (at 1.5m) were measured in a room with a reverberation time of 0.476 seconds and a net volume of 270m^3.
2. Sound pressure levels are also applicable to units in the upflow configuration provided that the discharge is into a ceiling void or ducted away.
3. For Glycool machines, add 2dB(A) to the total dB(A) figure (A/W/G range).
4. For unit standard air volumes and capacities, refer to the unit capacity section of this manual.
5. For more information on air volumes other than standard, consult Liebert Applications Engineering Department.
6. The above graphs are for a constant 75 Pascals external static pressure, all figures are quoted at standard operating conditions.
7. Free field sound pressure levels are calculated from the dBX and dBY Sound Power components.

Unit sound data (continued)

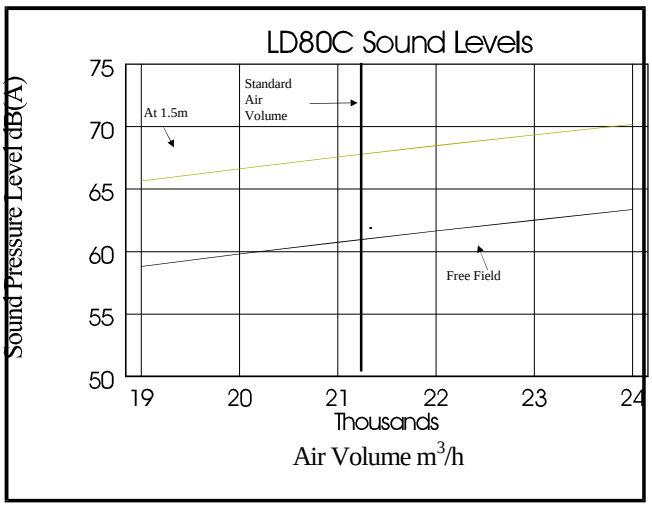

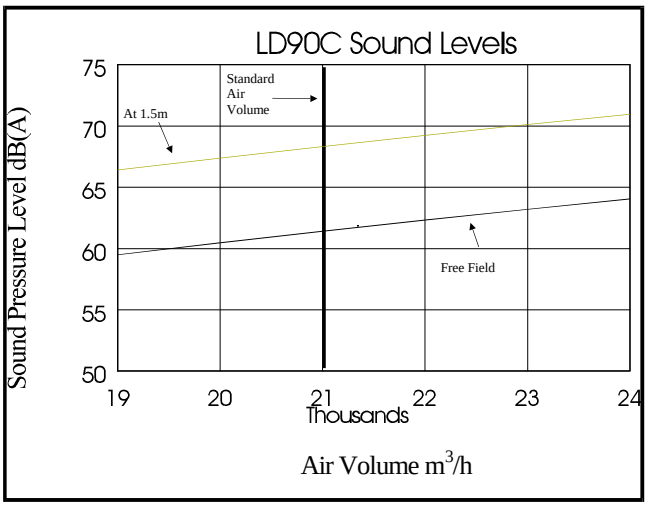

SOUND PRESSURE LEVELS dB(A) @ 1.5m										NR *
Hz	**31.5**	**63**	**125**	**250**	**500**	**1k**	**2k**	**4k**	**Total**	
LD20A/W/G	22.9	34.2	42.6	47.4	49.7	52.1	49.8	46.7	56.8	52.0
LD30A/W/G	29.0	40.3	48.7	53.5	55.8	58.2	55.9	52.8	62.9	57.0
LD37A/W/G	32.9	44.2	52.6	57.4	59.7	62.1	59.8	56.7	66.8	61.0
LD46A/W/G	30.1	41.4	49.8	54.6	56.9	59.3	57.0	53.9	64.0	58.0
LD58A/W/G	33.3	44.6	53.0	57.8	60.1	62.5	60.2	57.1	67.2	61.0
LD67A/W/G	36.4	47.7	56.1	60.9	63.2	65.6	63.3	60.2	70.3	64.0
LD99A/W/G	38.3	49.8	58.6	63.3	65.6	68.0	65.7	62.2	72.8	68.0
LD30C	30.2	40.0	45.2	51.8	57.0	56.4	55.7	52.5	61.8	57.0
LD40C	32.8	42.7	47.9	54.5	59.8	59.2	58.5	55.3	64.7	58.0
LD50C	32.6	42.5	47.7	54.3	59.6	59.0	58.3	55.1	64.5	57.0
LD60C	34.3	44.8	50.3	57.3	63.0	62.3	61.6	58.2	68.2	62.0
LD70C	34.2	44.7	50.2	57.2	62.8	62.1	61.4	58.0	68.2	62.0
LD80C	33.5	44.1	49.8	57.1	62.9	62.2	61.2	57.7	67.8	63.0
LD90C	34.0	44.6	50.3	57.6	63.4	62.7	61.7	58.2	68.4	63.0

* NR values are quoted at a distance of 3m.

Notes:

1. Sound pressure levels (at 1.5m) were measured in a room with a reverberation time of 0.476 seconds and a net volume of $270m^3$.
2. Sound pressure levels are also applicable to units in the upflow configuration provided that the discharge is into a ceiling void or ducted away.
3. For Glycool machines, add 2dB(A) to the total dB(A) figure (A/W/G range).
4. For unit standard air volumes and capacities, refer to the unit capacity section of this manual.
5. For more information on air volumes other than standard, consult Liebert Applications Engineering Department.
6. The above graphs are for a constant 75 Pascals external static pressure, all figures are quoted at standard operating conditions.
7. Free field sound pressure levels are calculated from the dBX and dBY Sound Power components.

Unit sound data (continued)

SOUND POWER LEVELS dB(A) (System 4 DX)											Unit Total
	Hz	31.5	63	125	250	500	1k	2k	4k	Total	
LD20A/W/G	dBX	33.9	42.5	47.8	46.3	52.5	56.0	50.9	48.2	59.5	68.8
	dBY	34.6	47.1	51.9	51.0	54.9	56.6	55.8	51.6	62.1	
	dBZ	28.2	43.9	51.6	56.9	60.5	61.7	60.6	57.7	67.0	
LD30A/W/G	dBX	40.0	48.6	53.9	52.4	58.6	62.1	57.0	54.3	65.6	74.9
	dBY	40.7	53.2	58.0	57.1	61.0	62.7	61.9	57.7	68.2	
	dBZ	34.3	50.0	57.7	63.0	66.6	67.8	66.7	63.8	73.1	
LD37A/W/G	dBX	43.9	52.5	57.8	56.3	62.5	66.0	60.9	58.2	69.5	78.8
	dBY	44.6	57.1	61.9	61.0	64.9	66.6	65.5	61.6	72.1	
	dBZ	38.2	53.9	61.6	66.9	70.5	71.1	70.6	67.7	77.0	
LD46A/W/G	dBX	41.1	49.7	55.0	53.5	59.7	63.2	58.1	55.4	66.7	76.0
	dBY	41.8	54.3	59.1	58.2	62.1	63.8	63.0	58.8	69.3	
	dBZ	35.4	51.1	58.8	64.1	67.7	68.9	67.8	64.9	74.2	
LD58A/W/G	dBX	44.3	52.9	58.2	56.7	62.9	66.4	61.3	58.6	69.9	79.2
	dBY	45.0	57.5	62.3	61.4	65.3	67.0	66.2	62.0	72.5	
	dBZ	38.6	54.3	62.0	67.3	68.1	69.3	68.2	65.3	77.4	
LD67A/W/G	dBX	47.4	56.0	61.3	59.8	66.0	69.5	64.4	61.7	73.3	82.5
	dBY	48.1	60.6	65.4	64.5	68.4	70.1	69.3	65.1	75.6	
	dBZ	41.7	57.4	65.1	70.4	74.0	75.2	74.1	71.2	80.5	
LD99A/W/G	dBX	49.3	58.1	63.8	62.2	68.4	71.9	66.8	63.7	74.9	84.2
	dBY	50.0	62.7	67.9	66.9	70.8	72.5	71.7	67.1	77.5	
	dBZ	43.6	59.5	67.6	72.8	76.4	77.6	76.5	73.2	82.4	

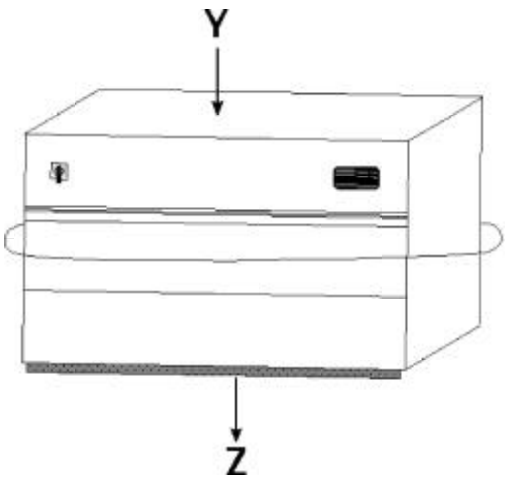

Note:
Sound power to sound pressure relationship used:

$$L_p = L_w + 10\log_{10}\frac{K}{4\pi(d^2)} + \frac{4}{A}$$

Where for free field $K = 1$ and $\frac{4}{A} = 0$.

Unit sound data (continued)

SOUND POWER LEVELS dB(A) (System 4 Chilled Water)											Unit Total
	Hz	31.5	63	125	250	500	1k	2k	4k	Total	
LD30C	dBX	45.1	50.1	53.7	54.4	57.7	57.9	52.5	45.9	63.2	78.5
	dBY	45.2	53.2	57.1	59.0	62.4	63.9	61.2	55.6	68.7	
	dBZ	43.7	56.4	63.1	67.2	71.6	72.9	71.5	67.6	77.9	
LD40C	dBX	47.8	52.8	56.5	57.2	60.5	60.7	55.3	48.6	65.9	81.3
	dBY	47.9	56.0	59.9	61.8	65.2	66.7	64.0	58.4	71.5	
	dBZ	46.7	59.2	65.9	70.0	74.4	75.7	74.3	70.7	80.7	
LD50C	dBX	47.6	52.6	56.3	57.0	60.3	60.5	55.1	48.4	65.7	81.0
	dBY	47.7	55.8	59.7	61.6	65.0	66.5	63.8	58.2	71.3	
	dBZ	46.5	59.0	65.7	68.0	74.2	75.5	74.1	70.5	80.4	
LD60C	dBX	50.3	55.5	59.4	60.1	63.6	63.9	57.9	51.1	60.1	85.2
	dBY	50.4	58.9	63.1	65.0	68.6	70.2	67.3	61.4	74.9	
	dBZ	49.1	62.3	70.3	73.7	78.4	79.7	78.3	74.4	84.6	
LD70C	dBX	50.2	55.4	59.2	60.0	63.4	63.7	57.7	51.0	68.7	84.9
	dBY	50.3	58.7	63.0	64.9	68.4	70.0	67.1	61.2	74.6	
	dBZ	49.0	62.1	69.2	73.5	78.2	79.5	78.1	74.2	84.4	
LD80C	dBX	49.7	55.1	58.9	59.7	63.2	63.5	57.4	50.6	68.5	85.0
	dBY	49.8	58.4	62.8	64.7	68.3	69.9	67.0	61.0	74.5	
	dBZ	48.5	61.9	69.1	73.5	78.3	79.6	78.2	74.0	84.5	
LD90C	dBX	53.0	58.6	62.4	60.5	63.9	64.2	58.1	51.5	69.8	85.1
	dBY	50.8	59.2	63.5	65.3	68.8	69.8	67.4	61.5	74.8	
	dBZ	49.2	62.3	69.6	73.2	78.5	79.8	78.2	74.6	84.6	

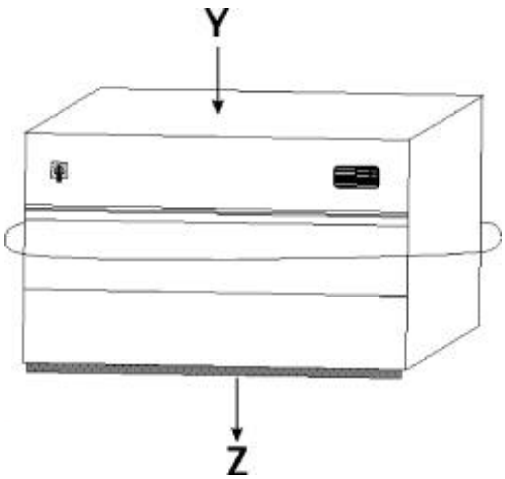

Note:
Sound power to sound pressure relationship used:

$$L_p = L_w + 10\log_{10}\frac{K}{4\pi(d^2)} + \frac{4}{A}$$

Where for free field $K = 1$ and $\frac{4}{A} = 0$.

Electrical data

Component and standard unit full load current (FLA)

MODEL	COMPRESSOR			MOTOR	ELECTRIC REHEAT	INFRARED HUMIDIFIER
	Operating* Amps	FLA @ 400V	LRA	FLA @ 400V	FLA @ 400V	FLA @ 400V
LD/LU 20A/W/G	5.1	7.9	38.9	2.1	21.6	6.4
LD/LU 30A/W/G	8.1	11.4	54.7	2.7	21.6	12.9
LD/LU 37A/W/G	12.6	17.5	-	5.3	21.6	12.9
LD/LU 46A/W/G	11.0	14.3	87.6	7.1	36.0	12.9
LD/LU 58A/W/G	14.0	18.4	108.4	9.5	36.0	12.9
LD/LU 67A/W/G	16.8	20.9	124.8	11.8	36.0	12.9
LD/LU 99A/W/G	25.0	-	-	16.1	43.2	12.9
LD/LU 20E	5.1	7.9	38.9	2.7	21.6	6.4
LD/LU 30E	8.1	11.4	54.7	3.7	21.6	12.9
LD/LU 37E	12.6	17.5	-	5.3	21.6	12.9
LD/LU 46E	11.0	14.3	87.6	9.5	36.0	12.9
LD/LU 58E	14.0	18.4	108.4	11.8	36.0	12.9
LD/LU 67E	16.8	20.9	124.8	15.2	36.0	12.9
LD/LU 30C	-	-	-	3.7	21.6	6.4
LD/LU 40C	-	-	-	5.3	21.6	6.4
LD/LU 50C	-	-		7.1	21.6	6.4
LD/LU 60C	-	-	-	11.8	21.6	12.9
LD/LU 70C	-	-	-	11.8	36.0	12.9
LD/LU 80C	-	-	-	15.2	36.0	12.9
LD/LU 90C	-	-	-	15.2	36.0	12.9

Calculation of total machine FLA:

1. Max. FLA = 2 x Compressor + Motor + Electric Reheat.
2. Units with hot gas, hot water or no reheat, FLA = 2 x Compressors + Motor + Humidifier.
3. Chilled water machines FLA = Motor + Electric Reheat + Humidifier.

* Data @ 54.5°C condensing temperature, 7.0°C evaporating temperature.

Matching condensers

Standard condenser selections - single circuit - (2 condensers per indoor unit)

Ambient	32°C	35°C	41°C	46°C	49°C
LD20AU/D	HCA14	HCA14	HCA17	HCA24	HCA24
LD30AU/D	HCA17	HCA24	HCA29	HCA33	HCA33
LD37AU/D	HCA24	HCA29	HCA33	HCA42	HCA42
LD46AU/D	HCA29	HCA33	HCA42	HCA49	HCA49
LD58AU/D	HCA42	HCA42	HCA58	HCA74	HCA74
LD67AU/D	HCA42	HCA49	HCA74	HCA74	HCA87
LD99AU/D	HCA58	HCA74	HCA95		

Standard condenser selections - dual circuit - (1 condenser per indoor unit)

Ambient	32°C	35°C	41°C	46°C	49°C
LD/U20A	HBA33	HBA33	HBA49	HBA49	HBA49
LD/U30A	HBA49	HBA49	HBA74	HBA74	HBA74
LD/U37A	HBA49	HBA74	HBA74	HBA87	HBA87
LD/U46A	HBA74	HBA74	HBA87		
LD/U58A	HBA74	HBA87			
LD/U67A	HBA87				
LD99AU/D	TBA				

Selections are based on a maximum condensing temperature of 49°C in ambients of 32 to 35°C, a maximum condensing temperature of 52°C in ambients of 36 to 41°C, a maximum condensing temperature of 55°C in ambients of 42 to 46°C and a maximum condensing temperature of 58°C in ambients of 47 to 49°C. Indoor unit conditions 24°C/50% RH, standard airflow.

Note: Indoor unit capacity decreases with increasing condensing temperature, consult Liebert Applications Engineers for specific capacity details. TBA = To be advised

Low noise condenser selections - single circuit - (2 condensers per indoor unit)

Ambient	32°C	35°C	38°C	41°C
LD/U20A	HCA17	HCA24	HCA24	HCA24
LD/U30A	HCA24	HCA29	HCA29	HCA42
LD/U37A	HCA29	HCA33	HCA33	HCA42
LD/U46A	HCA33	HCA42	HCA42	HCA49
LD/U58A	HCA42	HCA49	HCA49	HCA74
LD/U67A	HCA49	HCA58	HCA58	HCA74
LD99AU/D	HCA74	HCA87	HCA87	

Ambient	32°C	35°C	38°C	41°C
LD/U20A	HBA33	HBA49	HBA49	HBA49
LD/U30A	HBA49	HBA49	HBA49	HBA74
LD/U37A	HBA49	HBA74	HBA74	HBA87
LD/U46A	HBA74	HBA87	HBA87	
LD/U58A	HBA87			
LD/U67A				
LD99AU/D				

Selections are based on a maximum condensing temperature of 49°C in ambients of 32 to 35°C and a maximum condensing temperature of 52°C in ambients of 36 to 41°C. Indoor unit conditions 24°C/50% RH, standard airflow.

Note: Indoor unit capacity decreases with increasing condensing temperature, consult Liebert Applications Engineers for specific capacity details.

Dimensional data

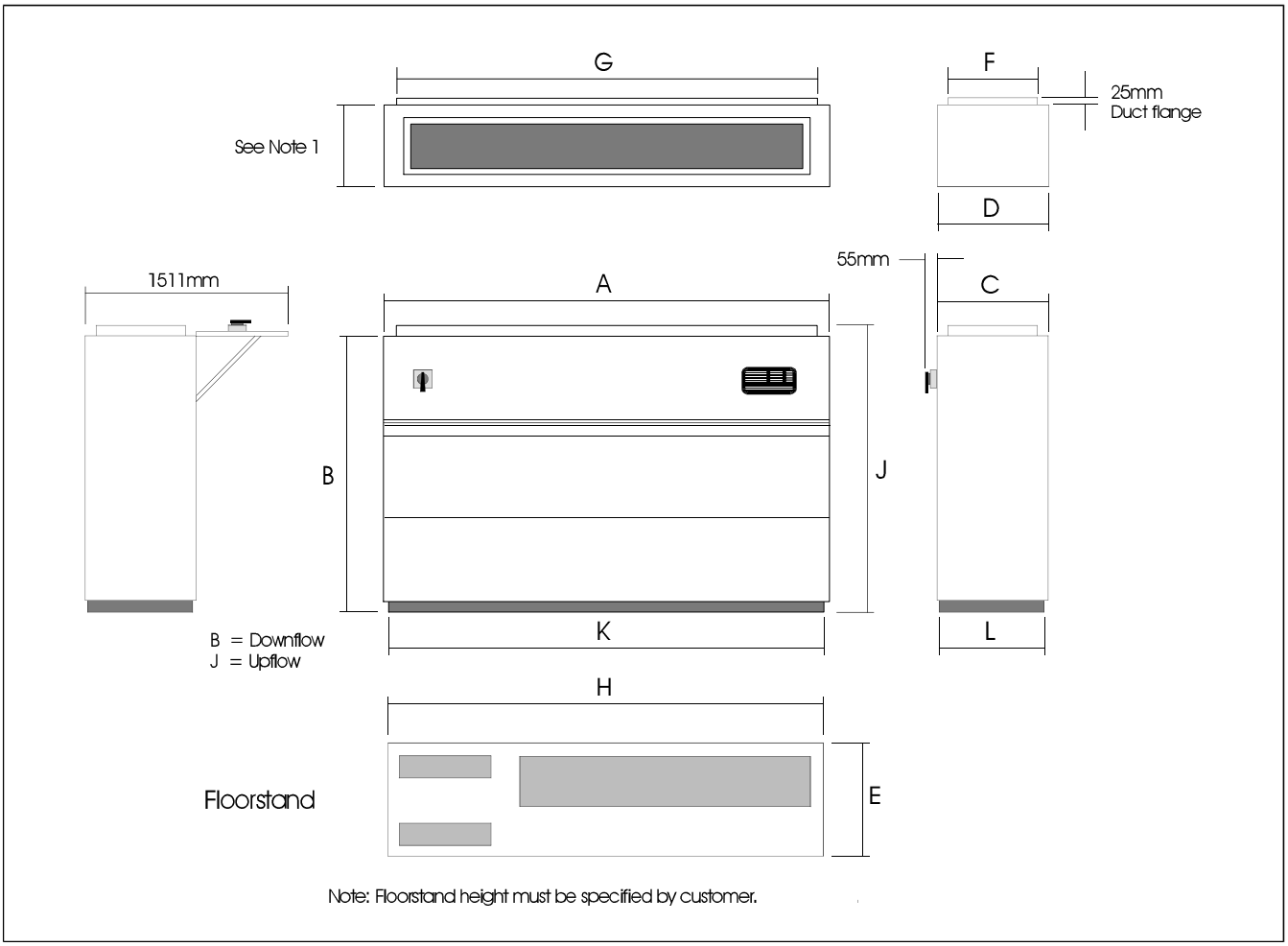

MODELS	DIMENSIONAL DATA (mm)										
	A	B	C	D	E	F	G	H	J	K	L
LD 30/40/50C	1270	1880	889	864	838	813	1168	1219	-	1220	839
LU 30/40/50C	1270	-	889	864	838	813	1168	1219	1935	1220	839
LD 20/30/37/A/W/G/E	1880	1880	889	864	838	813	1778	1829	-	1830	839
LD 60/70C	1880	1880	889	864	838	813	1778	1829	-	1830	839
LU 20/30/37/A/W/G/E	1880	-	889	864	838	813	1778	1829	1935	1830	839
LU 60/70C	1880	-	889	864	838	813	1778	1829	1935	1830	839
LD 46/58/67A/W/G/E	2515	1880	889	864	838	813	2413	2464	-	2465	839
LD 80/90C	2515	1880	889	864	838	813	2413	2464	-	2465	839
LU 46/58/67A/W/G/E	2515	-	889	864	838	813	2413	2464	1935	2465	839
LU 80/90C	2515	-	889	864	838	813	2413	2464	1935	2465	839
LD 99A/W/G	3099	1829	889	864	838	813	2977	3048	-	3049	839

Notes:
1. Standard nominal plenum heights are 510mm, 578mm and 883mm. 578mm minimum is required for vertical units with steam reheat, hot water reheat or steam humidifier options.
2. Dimensions C and A are external unit dimensions, i.e. to the outside of exterior panels.
3. The above data is intended as a guide only. For specific or non-specified dimensions, refer to Liebert Applications Engineering.

A World Leader in Computer Support Systems

Environmental Control
Power Protection
Site Monitoring

Liebert Corporation designs, manufactures and markets complete systems for improved uptime and performance of electronic equipment, including computer rooms, networks, medical, industrial, and other critical systems. The result is improved business operations, increased productivity and higher return on the customer's electronic equipment investment. Liebert Systems provide dependable environmental control and electrical power protection, combined with centralised monitoring. This approach represents a single-source integrated support network. Based on over two decades of experience and over 100,000 installations worldwide, Liebert is committed to offering the highest quality products and services for critical electronics.

While every precaution has been taken to ensure accuracy and completeness in this manual, Liebert assumes no responsibility and disclaims all liability for damages resulting from the use of the information contained herein or any errors or omissions.

Liebert

European Headquarters

Liebert Europe

Zona Industriale Tognana,
Via Leonardo da Vinci, 8,
35028 Piove di Sacco (PD), Italy.
Tel: +39-049-9719111
Fax: +39-049-9719455
Internet: http://www.liebert.com

International Headquarters

Liebert Corporation

1050 Dearborn Drive, P.O. Box 29186
Columbus, Ohio 43229 USA
Tel: +1-614-888-0246
Fax: +1-614-841-6022
Internet: http://www.liebert.com

LPN: SLE S4A TDM D.0
HPN: 272028_1 (27/11/99)