HCF INDUSTRIES

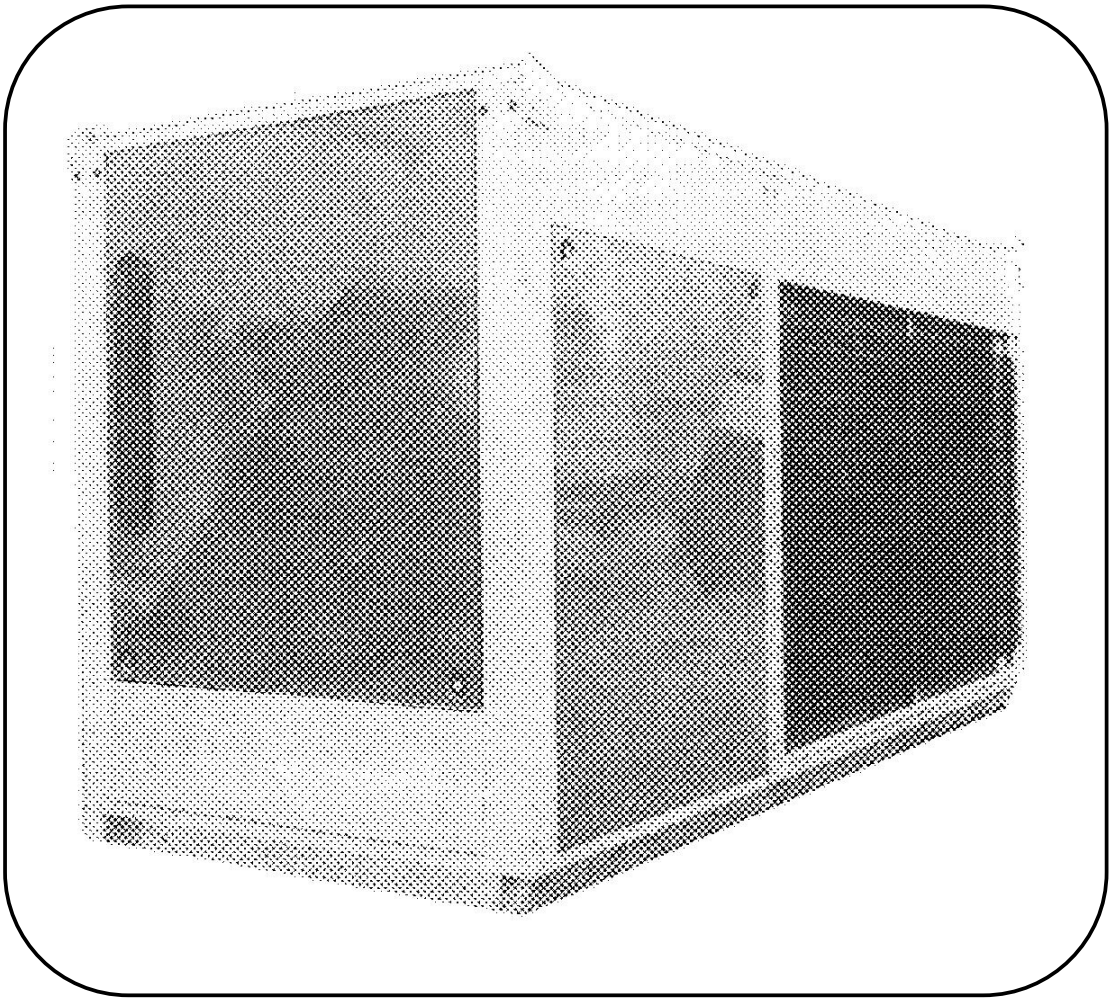

CONTROL AND REGULATION WITH THE CLIMATIC RANGE PDVPC

TABLE OF CONTENTS

UNIT OPERATION WITH "CLIMATIC"

I : PRESENTATION OF THE CLIMATIC CONTROL

The CLIMATIC is a self contained programmable heating/cooling control system. At present, it replaces the traditional electromagnetic control panels usually found on refrigeration equipment. Materially, it is composed of an extensible microprocessor board with 16 inputs and 8 outputs.

- Temperature sensors and contacts indicating the operating condition of the machine (safety devices, on/off, etc...) are connected to the inputs.
- Control relays (compressors, fans, etc...) are connected to the outputs.

The CLIMATIC is capable of a high degree of measurement whilst having extensive control capacity.
The system is rendered self contained by inclusion of :

- a 12V A.C. power supply,
- an extension for extra outputs (8),
- a liquid cristal display
- a serial link (RS-232 type, 300 Bauds) is included on the processor board for communications with a personal computer..

MIONS 18/10/94

PRESENTATION OF THE DISPLAY

The display froups all information concerning operation of the unit (on/off, warning lights, etc...).

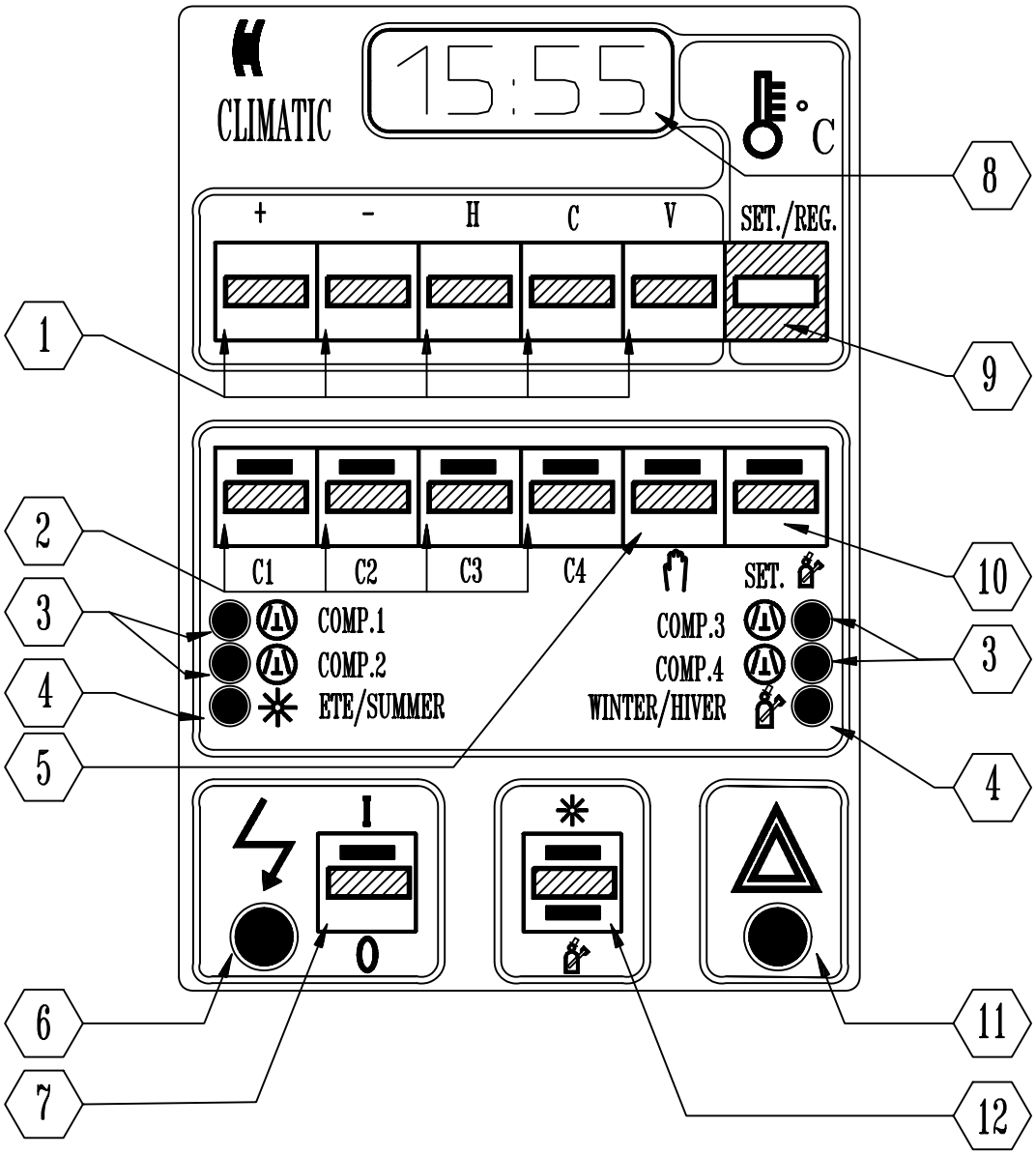

- Legend:

1 : CLIMATIC function keys
2 : compressor on/off switches
3 : compressor run lights
4 : operating mode indicating lights (cooling, heating)
5 : choice of manual/automatic changeover between cooling/heating operating modes
6 : power on indicating light
7 : main unit on/off switch
8 : display
9 : regulated water temperature display
10 : cooling/heating setpoint changeover
11 : fault indicating light

12 : cooling/heating changeover (if manual changeover is selected (key 5))

I : EXPLANATION OF THE VARIOUS DISPLAY KEYS:

1 : climatic function keys

H : enables reading and adjustments of time in hours, minutes and day of the week .
1st stroke : time reading in hours and minutes
2nd stroke : reading and modification of hours
3rd stroke : reading and modification of minutes
4th stroke : reading and modification of days
1: sunday, 2: monday, 3: tuesday, 4: wednsday, 5: thursday, 6: friday, 7: saturday.
Modifications are made using the + and - keys.

C : gives access to setpoints. When the key is depressed, the number of the setpoint is displayed (00 to 15) and when the key is released, the value of that setpoint is displayed.
Each new depression of the C key displays the next setpoint. The value of the setpoint displayed can be modified using the + and - keys.

V : enables reading of program variables. When the key is depressed, the address of the variable is displayed, and when the key is released, the value of the variable is displayed.
To change addresses, use the + and - keys.

Input checking :
To check a board input, the address of the corresponding variable must be displayed..
The 16 board inputs can be assigned either to sensors or to contacts condition. Input addresses vary according to the case in consideration.

When the pointer is located at an address between O and 15 (sensor input), we find ourselves in one of the following situations :
- if the board input is short-circuited, the display shows 99.5°C.
- if the board input is an open circuit, the display shows -28°C.
- if a sensor or resistor is connected acreoss the two terminals, a temperature value in °C will be displayed..

When the pointer is placed at an address between 16 and 31 (contact inputs) :
* if the contact is woired without a sensor :,
  - if the contact is closed the display show 1 in L units or 255 in U units.
  - if the contact is open, the display shows 0 in L units or 000 in U units.

* If the contact is wired in series with a sensor,
  - if the contact is closed, the display shows 1 in L units or a value greater than 0 in U units,
  - if the contact is open, the display shows 0 in L units or 000 in U units..

* If there is an input collector.
  The board mentionned above enables the state of several contacts to be monitored using a single input on the Climatic processor board..

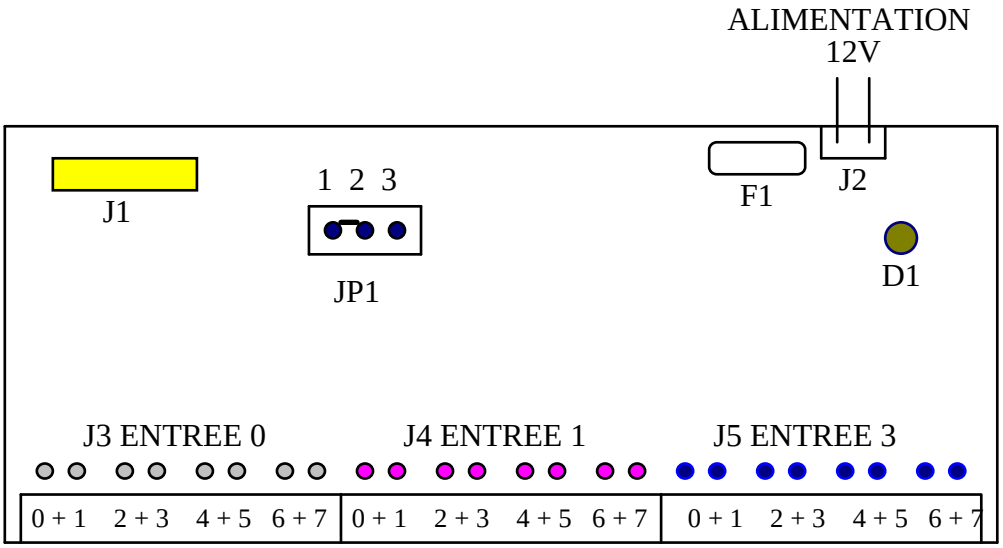

- Legend

J1 : HE connector 10 climatic connection in J16
J2 : connector 2 points 12V power supply
J3 : connector 12 points logic inlets connection on inlet 0
J4 : connector 12 points logic inlets connection on inlet 1
J5 : connector 12 points logic inlets connection on inlet 2
JP1 : jumper for the 24 logic inlets card indentilication
D1: led for power on
F1: 315 mA

Configuration of the card:

if inlets are annoucde in points 169 to 171, jumper is placed between 1 and 2
if inlets are annoucde in points 173 to 175, jumper is placed between 2 and 3

- A value expressed in U unit corresponds to the different positions of each contact wired on terminals 0, 1, 2, 3, 4, 5, 6, 7, a led indicates if contact is ON or OFF (ON = lighted led).
- THis value can be read on the display at S inlet setting point.
- The different values witch can be read on this inlet depend on the number of ON or OFF contacts. Each contact has its own value and the addition of each contact gives the inlet value.

contacts	poids
0	**1**
1	**2**
2	**4**
3	**8**
4	**16**
5	**32**
6	**64**
7	**128**

Exemple :

The value read to the corresponding inlet gives 85U, so we can determinate the ON or OFF contacts as follows:

contact 0 = 1U
+ contact 2 = 4U
+ contact 4 = 16U
+ contact 6 = 64U

85U

* decoding at the display input collector.
T1 T2 /T3 T4 T5 /T6 indicates that :
contacts wired to terminals 3 and 6 are open,,
contacts wired to terminals 1, 2, 4, 5 are closed..
At the address for variable S one can read a value of 216.

STATE OF CONTACTS	VAL	STATE OF CONTACTS	VAL
S	255	/T1 T2 T3 T4 T5 T6 /S	124
T1 T2 T3 T4 T5 T6 /S	252	/T1 T2 T3 T4 T5 /T6 /S	120
T1 T2 T3 T4 T5 /T6 /S	248	/T1 T2 T3 T4 /T5 T6 /S	116
T1 T2 T3 T4 /T5 T6 /S	244	/T1 T2 T3 T4 /T5 /T6 /S	112
T1 T2 T3 T4 /T5 /T6 /S	240	/T1 T2 T3 /T4 T5 T6 /S	108
T1 T2 T3 /T4 T5 T6 /S	236	/T1 T2 T3 /T4 T5 /T6 /S	104
T1 T2 T3 /T4 T5 /T6 /S	232	/T1 T2 T3 /T4 /T5 T6 /S	100
T1 T2 T3 /T4 /T5 T6 /S	228	/T1 T2 T3 /T4 /T5 /T6 /S	96
T1 T2 T3 /T4 /T5 /T6 /S	224	/T1 T2 /T3 T4 T5 T6 /S	92
T1 T2 /T3 T4 T5 T6 /S	220	/T1 T2 /T3 T4 T5 /T6 /S	88
T1 T2 /T3 T4 T5 /T6 /S	216	/T1 T2 /T3 T4 /T5 T6 /S	84
T1 T2 /T3 T4 /T5 T6 /S	212	/T1 T2 /T3 T4 /T5 /T6 /S	80
T1 T2 /T3 T4 /T5 /T6 /S	208	/T1 T2 /T3 /T4 T5 T6 /S	76
T1 T2 /T3 /T4 T5 T6 /S	204	/T1 T2 /T3 /T4 T5 /T6 /S	72
T1 T2 /T3 /T4 T5 /T6 /S	200	/T1 T2 /T3 /T4 /T5 T6 /S	68
T1 T2 /T3 /T4 /T5 T6 /S	196	/T1 T2 /T3 /T4 /T5 /T6 /S	64
T1 T2 /T3 /T4 /T5 /T6 /S	192	/T1 /T2 T3 T4 T5 T6 /S	60
T1 /T2 T3 T4 T5 T6 /S	188	/T1 /T2 T3 T4 T5 /T6 /S	56
T1 /T2 T3 T4 T5 /T6 /S	184	/T1 /T2 T3 T4 /T5 T6 /S	52
T1 /T2 T3 T4 /T5 T6 /S	180	/T1 /T2 T3 T4 /T5 /T6 /S	48
T1 /T2 T3 T4 /T5 /T6 /S	176	/T1 /T2 T3 /T4 T5 T6 /S	44
T1 /T2 T3 /T4 T5 T6 /S	172	/T1 /T2 T3 /T4 T5 /T6 /S	40
T1 /T2 T3 /T4 T5 /T6 /S	168	/T1 /T2 T3 /T4 /T5 T6 /S	36
T1 /T2 T3 /T4 /T5 T6 /S	164	/T1 /T2 T3 /T4 /T5 /T6 /S	32
T1 /T2 T3 /T4 /T5 /T6 /S	160	/T1 /T2 /T3 T4 T5 T6 /S	28
T1 /T2 /T3 T4 T5 T6 /S	156	/T1 /T2 /T3 T4 T5 /T6 /S	24
T1 /T2 /T3 T4 T5 /T6 /S	152	/T1 /T2 /T3 T4 /T5 T6 /S	20
T1 /T2 /T3 T4 /T5 T6 /S	148	/T1 /T2 /T3 T4 /T5 /T6 /S	16
T1 /T2 /T3 T4 /T5 /T6 /S	144	/T1 /T2 /T3 /T4 T5 T6 /S	12
T1 /T2 /T3 /T4 T5 T6 /S	140	/T1 /T2 /T3 /T4 T5 /T6 /S	8
T1 /T2 /T3 /T4 T5 /T6 /S	136	/T1 /T2 /T3 /T4 /T5 T6 /S	4
T1 /T2 /T3 /T4 /T5 T6 /S	132	/T1 /T2 /T3 /T4 /T5 /T6 /S	0
T1 /T2 /T3 /T4 /T5 /T6 /S	128		

2 : starting and stopping of compressors

Enables or disables compressor operation. Each compressor has its own start/stop control.

3 : compressor run lights

Indicates operation of the compressor. Each compressor has its own run light..

4 : operating mode lights (cooling, heating)

Indicates the current operating mode (cooling or heating).

- **Remark :** on the PDVPC with 2 water type heat exchangers, the indicating lights indicate the operating modes of refrigeration circuits 1 and 2.

5 : key enabling choice of automatic or manual

In the automatic position (key pressed) the Climatic chooses the operating mode itself. In the manual position, (key released) the operating mode is determined with key 12.

- **Remark :** in PDVPC units with two water cooled heat exchangers, this key enables selection of the operating mode of the second heat exchanger (cooling key released).

6 : power indicating light

Lights up when power is supplied to the unit.

7 : general on/off switch

Cuts off the power supply to the entire unit control section.

8 : display

Enables reading of all the variables

9 : display of desired water temperature setting

Enables visualization of the regulated water temperature and to modify it if necessay using the + and - keys.

10 : setpoint changeover

Enables changeover of the first 4 setpoints. Key pressed heating setpoints, key released cooling setpoints (see page ..).

11 : fault indicating light

Warns user of a default on the machine.

12 : operating mode changeover switch (if in manual position)

Enables operating mode changeover if key 5 authorizes the latter (key 5 released).

- **Remark :** In PDVPC units, the changeover switch enables selection of the operating mode for circuits 3 and 4

II - REPLACING THE DISPLAY

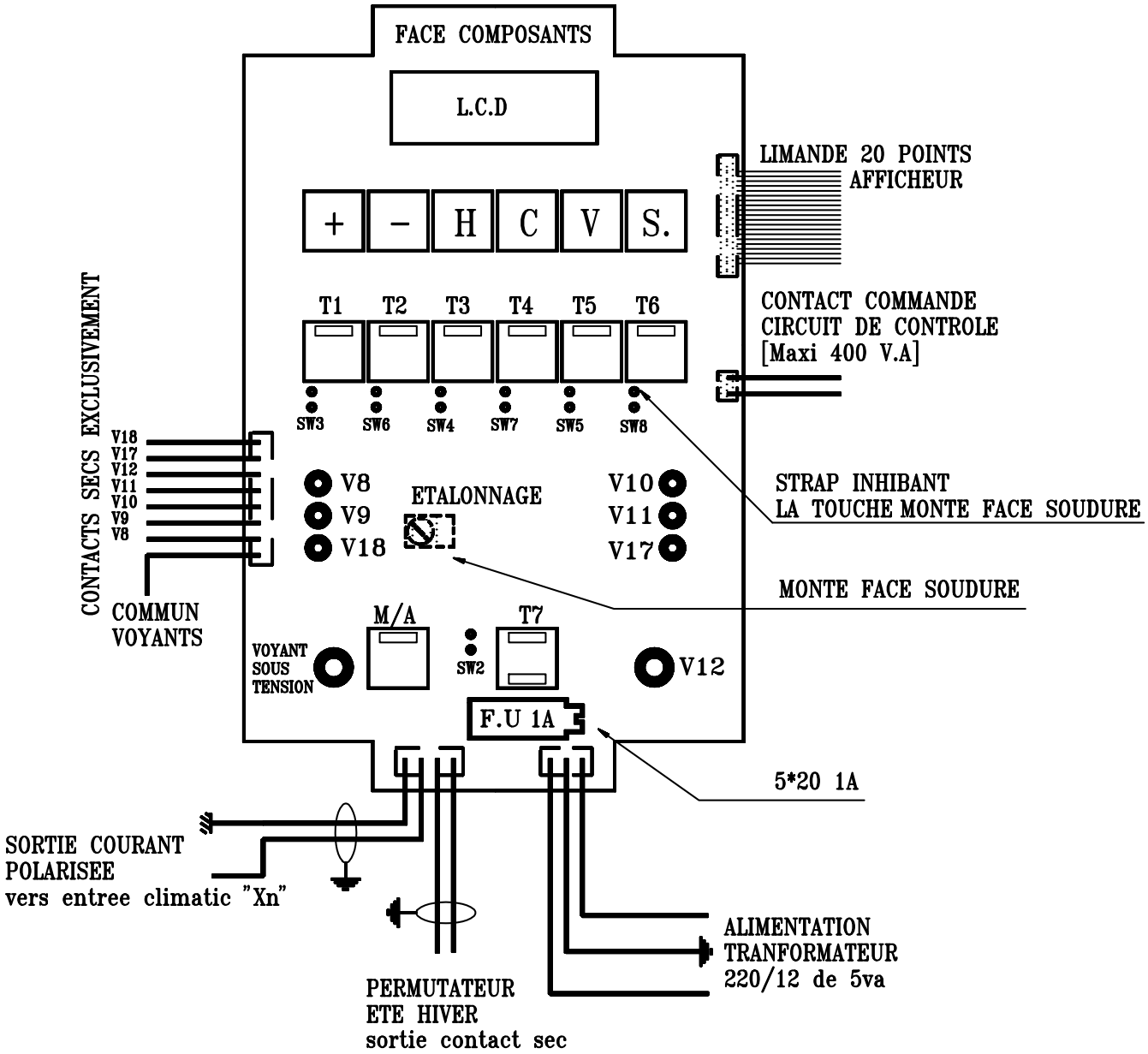

1 : connections

Before making any connections, it is imperative that the following points be checked:

- No voltage should be present on the indicating light control connector.
- The output from inverter "T7" is exclusively reserved for decoding by the Climatic.
- The output corresponding to keys "T1" to "T6" and "S" should be connected directly to an input on the Climatic, taking care to respect polarity.
- The power supply control on the control circuit should pilot a power supply of less than 400VA, otherwise relays should be inserted between it and the circuits in question..

2 : calibration

When conducting electrical tests on the unit, the display should be adjusted to the Climatic control to which it is connected. Proceed in the following manner :

- Check that keys "T1" to "T6" are not inhibited (shunts not installed).
- Depress keys "T1" to "T6" (yellow indicating lights lit).
- Using keys "V", "+" and "-" select the corresponding input on the Climatic control (variables 16 to 31 for inputs "X0" to "X15" see list of variables).
- Ajust the calibrating trimmer so as to read "252".

3 : configuration

Keys "T1" to "T7" can be inhibited using a small shunt (see wiring diagram). To inhibit a key, just place a small shunt in the 2 pin socket next to it.

OPERATING PRINCIPLE

I : HEATING/COOLING CONTROL SETPOINT MODIFICATION

The first four setpoints (00 => 03) enable adjustment of the heating/cooling control curves depending on the setting made with key N°10.

- if key n° 10 is released : cooling control adjustment
  - setpoint 0 => CONSEE : chilled water setpoint (gradient origin)
  - setpoint 1 => CONSAE : supply air setpoint (gradient origin)
  - setpoint 2 => PENTEE : regulating gradient
  - setpoint 3 => TEEGI : minimum exchanger entering water temperature
  - setpoint 4 => TARETE : air temperature for summer regulation
- if key n° 10 is depressed : heating control adjustment
  - setpoint 0 => CONSEH : heating water setpoint (gradient origin)
  - setpoint 1 => CONSAH : supply air setpoint (gradient origin)
  - setpoint 2 => PENTEH : regulating gradient
  - setpoint 3 => TEECS : maximum exchanger entering water temperature
  - setpoint 4 => TARHIV : air temperature for winter regulation

All setpoints have minimum and maximum limits:

Setpoints which can be modified through the unit display module are as follows. These should only be input into the Climatic control in the event of an I.C. board being changed or when the unit is started-up fir the first time.

Setpoint n°	Synonym	Unit	Initial val.	Minimum	Maximum
key SETH = OFF (key n°10)					
Setpoint n° 00	CONSEE	C	+20	+5C	+40
Setpoint n° 01	CONSAE	C	X	TARETE	+40
Setpoint n° 02	PENTEE	U	X	0	70
Setpoint n° 03	TEEGI	C	+4	+4	+20
Setpoint n° 04	TARETE	C	X	TARHIV+5	+45
key SETH = ON (key n°10)					
Setpoint n° 00	CONSEH	C	+20	+10	+55C
Setpoint n° 01	CONSAH	C	X	+10	TARHIV
Setpoint n° 02	PENTEH	U	X	0	70
Setpoint n° 03	TEECS	C	+50	+40	+65
Setpoint n° 04	TARHIV	C	X	-5	TARETE-5
Setpoint n° 05	DIFET	K	1	0,5	10
Setpoint n° 06	ENCL	K	1	0,5	10
Setpoint n° 07	STOPAIR	C	-10	-10	0
Setpoint n° 08	HMDRI	U	0	0	240
Setpoint n° 09	HMFRI	U	0	0	240
Setpoint n° 10	HJDRI	U	238	1	238
Setpoint n° 11	HJFRI	U	238	1	238
Setpoint n° 12	STOPINOC	U	0	0	244
Setpoint n° 13	DDEGIS	U	4	1	10
Setpoint n° 14	TEAU	C	*	TEEGI	TEECS
Setpoint n° 15	CRELANCE	C	X	-28	TARHIV
* Calculated by the Climatic control depending on setpoints 00 to 03					

All setpoints are saved in battery sustained memory in the event of power outage.
To ensure that saving takes place properly, please check that the battery shunt is in the "T" working position. This shunt is situated next to the battery.

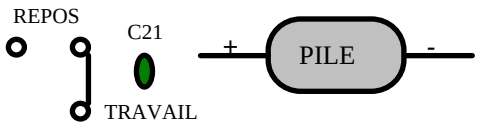

II : HEATIN/COOLING CYCLE CHANGEOVER (SUMMER/WINTER)

- Heating/cooling cycle changeover is automatic and depends on outdoor temperature..
  If key 5 is pressed position automatique
  If TEA > TARETE cooling operation
  If TEA < TARHIV heating operation
  If TARHIV<TEA<TARETE unit stop

  With
  - TEA (address 0) : Outdoor air emperature
  - TARETE (setpoint 06) : Setpoint for summer operation, in degrees
  - TARHIV (setpoint 06) : Setpoint for winter operation, in degrees
  TARETE and TARHIV are modifiable through the display module (see procedure P.).

- Heating or cooling cycle operation can be forced by using the manual changeover switch (key N°12). If key 5 is released, manual position.

III : STOPPING THE MACHINE BECAUSE OF TO LOW EXTERNAL TEMPERATURE

If external air temperature is below the STOPAIR setpoint, the unit is stopped and the boiler contact is on. The unit wiil run again if the external air temperature is 2°C above the STOPAIR setpoint

IV : REGULATING PRINCIPLE

Compressor starting and stopping is controlled as follows:

- Heating operation (winter):

The regulating temperature is calculated by the Climatic control according to Outdoor Air t temperature and using the following equation :

TEAU = CONSEH + [(CONSAH - TEA) x PENTEH / 16]

With
- TEAU (address 206): Water temperature calculated by the thermostat
- TEA (address 0): Outdoor Air Temperature
- PENTEH (address 229): Heating control gradient setpoint
- CONSEH (address 227): Heating water setpoint (gradient origin)

- CONSAH (address 228): Heating supply air setpoint (gradient origin)
- TEECS (address 231): Maximum water temperature setpoint

CONSEH is the minimum desired condenser leaving water temperature for an outdoor air temperature of CONSAH.

The gradient is expressed in 1/16ths so as to be more precise. If a gradient of 1,5 is required then adjust it to PENTEH = 24.

TEAU cannot be greater than TEECS

PENTEH, CONSEH, CONSEA are modifiable through the display (see modification of summer/winter setpoints).

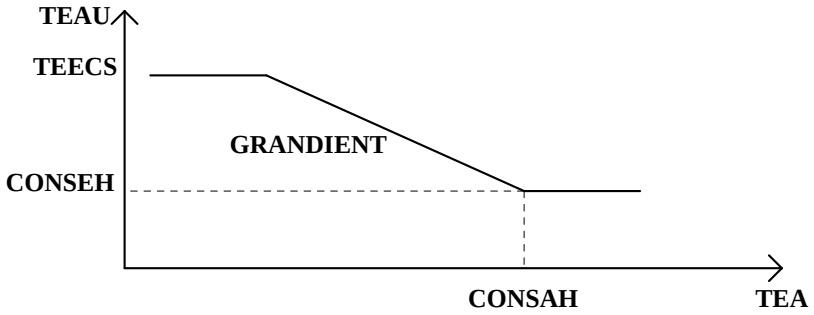

Exemple:

If CONSEH = 22°C when CONSAH = 20°C

TEAU = 22 + [1,5 x (20 - TEA)]

If TEA = 0°C, TEAU = 52°C

- Depending on regulated water temperature TEAU and actual water temperature(TEE) the Climatic determines compressor stage operation (THER).

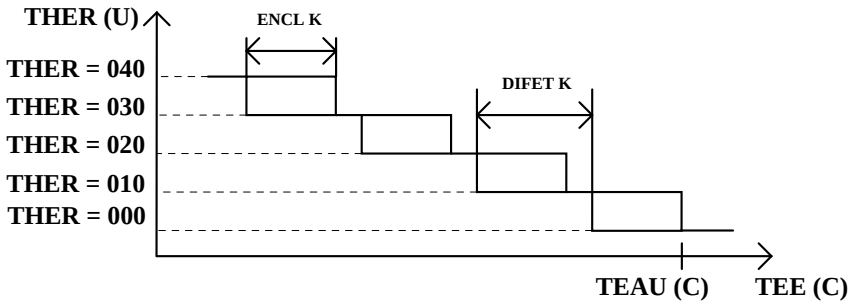

Exemple:

If TEAU = 52°C, ENCL = 3°C, DIFET = 2°C

THER	Cut-in	THER	Cut-oute
00 => 10	49°C	10 => 00	52°C
10 => 20	47°C	20 => 10	50°C
20 => 30	45°C	30 => 20	48°C
30 => 40	43°C	40 => 30	46°C

With:

- ENCL (address 198) : Differential stage cut-in and cut-out
- DIFET (address 197): Differential between stages
- THER (address 64): Number of thermostat steps

ENCL and DIFET can be modified on the display.

- Decoding the THER variable

value of THER	résultas
010	1 compressor
020	2 compressors

030	3 compressors
040	4 compressors
041	4 compressors and the boiler*

* system with boiler back-up

- Remark : on PDVPC units with deux water cooled heat exchangers, the variable THER is composed as follows:

thermostat of the first water cooled heat exchanger

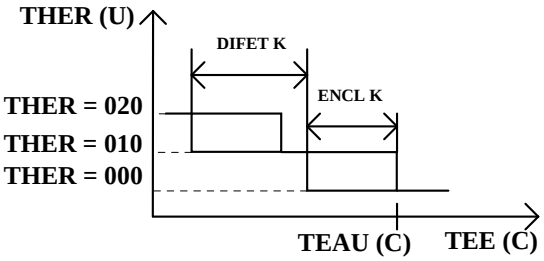

thermostat of the second water cooled heat exchanger

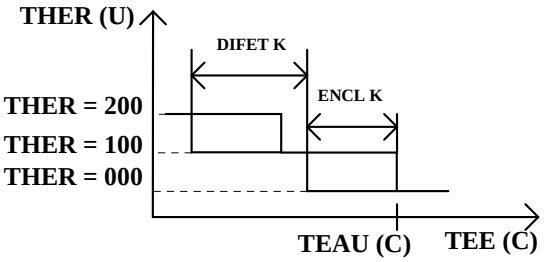

- Decoding is different on PDVPC units with 2 water cooled heat exchangers

val. THER	résultat
10	1 compressor circuit 1 or 2
20	2 compressors circuit 1 and 2
21	2 compressors circuit 1 and 2 plus the boiler*
100	1 compressor circuit 3 or 4
200	2 compressors circuit 3 and 4
202	2 compressors circuit 3 and 4 plus the boiler*
110	1 comp. circuit 1 or 2; 1 comp. circuit 3 or 4
120	2 comp. circuit 1 and 2; 1 comp. circuit 3 or 4
121	2 comp. circuit 1 and 2 and boiler*; 1 comp. circuit 3 or 4
210	1 comp. circuit 1 or 2; 2 comp. circuit 3 and 4
220	2 comp. circuit 1 and 2; 2 comp. circuit 3 and 4
222	2 comp. circuit 1; 2; 2 comp. circuit 3 and 4 and boiler*
223	2 comp. circuit 1 and 2; 2 comp. circuit 3 and 4; 2 boiler*

* system with boiler back-up

- Cooling operation (winter)

Regulating temperature is calculated by the Climatic as a function of Outdoor Air Temperature and according to the following equation:

TEAU = CONSEE - [(TE A- CONSAE) x PENTEE / 16]

Where:

- TEAU (address 206): Water temperature calculated by the thermostat
- TEA (address 0): Outdoor Air Temperature
- PENTEE (address 226): Summer setpoint regulating gradient
- CONSEE (address 224): Summer water temperature setpoint (gradient origin)
- CONSAE (address 225): Summer air temperature setpoint (gradient origin)
- TEEGI (address 230): minimum water temperature setpoint

CONSEE is the minimum desired exchanger entering water temperature for an outdoor air temperature of CONSAE.

The gradient is expressed in 1/16ths so as to be more precise. If a gradient of 1,5 is required then adjust it to PENTEE = 24.

TEAU cannot be greater than TEEGI

PENTEE, CONSEE, CONSEE, TEEGI are modifiable through the display (see modification of summer/winter setpoints).

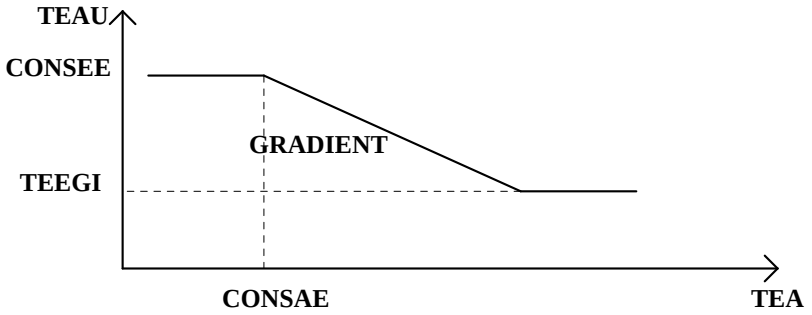

Example:

If CONSEE = 10°C when CONSAE = 22°C

TEAU = 10 - [1,5 * (TEA - 22)]

If TEA = 25°C, TEAU = 5,5°C

- Depending on the required water temperature TEAU and the actual water temperature (TEE) ltheClimatic determines stageing of compressor operation (THER).

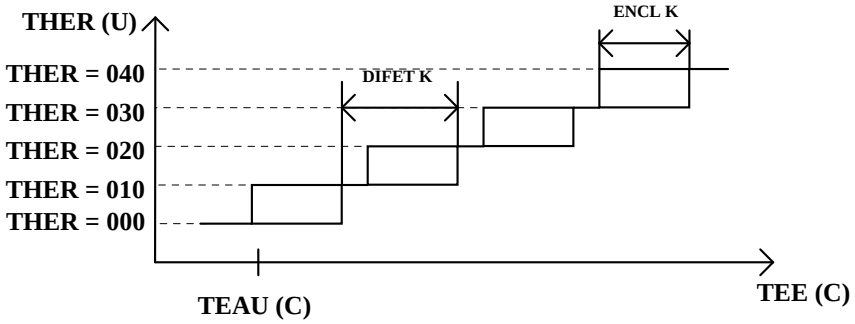

Exemple :

If TEAU = 5.5°C, ENCL = 3°C, DIFET = 2°C

THER	Cut-in	THER	Cut-out
00 => 10	8,5°C	10 => 00	5,5°C
10 => 20	10,5°C	20 => 10	7,5°C
20 => 30	12,5°C	30 => 20	9,5°C
30 => 40	14,5°C	40 => 30	11,5°C

With:

- ENCL (address 197) : Differential stage cut-in and cut-out
- DIFET (address 196): Differential between stages
- THER (address 64): Number of thermostat steps in operation

ENCL and DIFET can be modified on the display.

- Decoding of the THER variable

value of THER	résultats
010	1 compressor
020	2 compressors
030	3 compressors
040	4 compressors

- Remark : on PDVPC units with deux water cooled heat exchangers, the variable THER is composed as follows:

thermostat of the first water cooled heat exchanger

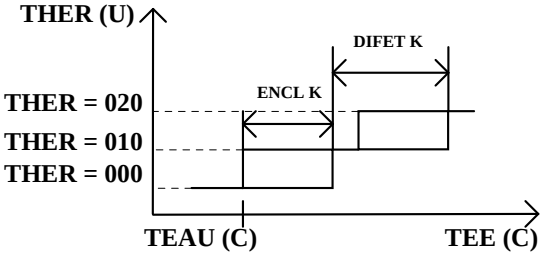

thermostat of the second water cooled heat exchanger

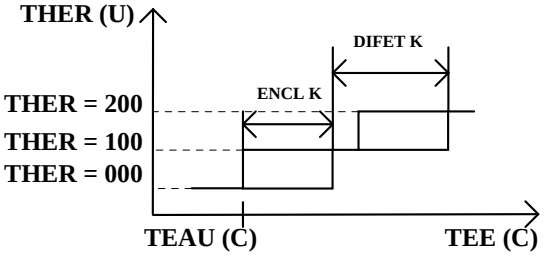

- Decoding is different on PDVPC units with 2 water cooled cold exchangers

val. THER	résultat
010	1 compressor circuit 1 or 2
020	2 compressors circuit 1 and 2
100	1 compressors circuit 3 or 4
200	2 compressors circuit 3 and 4
110	1 comp. circuit 1 or 2; 1 comp. circuit 3 or 4
120	2 comp. circuit 1 and 2; 1 comp. circuit 3 or 4
210	1 comp. circuit 1 or 2; 2 comp. circuit 3 and 4
220	2 comp. circuit 1 and 2; 2 comp. circuit 3 and 4

V : MODIFICATION OF THE CALCULATED WATER TEMPERATURE (TEAU) USING THE SET. KEY (N°9)

The SET. key enables modification of the regulated water temperature calculated by the Climatic. Press and release the key : the calculated water temperature is displayed. If the temperature is not satisfactory, press the + or - keys to modify it. You have several seconds during which to make your modifications. After this lapse of time, the display reverts to the actual water temperature value (TEE address 001).

The Climatic recalculates the new setpoints to take your modifications into account.

attention : Modifications can only be made with the SET. key (n°9) if the SETH (n°10) is depressed for winter control or released for summer control.

Remark : On PDVPC units with 2 water cooled heat exchangers, if the unit is operating on simultaneous suimmer and winter control, key n°10 has to be depressed in order to display the calculated heating water temperature and released in order to display the calculated cooling water temperature.
Otherwise, all modifications are the same as for a single heat exchanger PVDPC unit.

VI : CONTROL WITH SEVERAL UNIT

Climatic can control the running of 3 units max. The 0 card determines the main unit and the summer or winter control. The main machine calculates the required water température and transfert it on each unit. The unit which has the most défaults is put on the last rank in a priority order.

witch:

PRIM : units running priority
TEAU0 : water température control calculated by the 0 card
TEAU1 : water température control calculated by the 1 card
TEAU2 : water température control calculated by the 2 card

VII : STARTING A COMPRESSOR

1 : Unit availability (DISPOM)

The unit is able to operate if the following conditions are satisfied :

- no water flow defaults.
- the inlet water temperature sensor is not defective ((TEE > -65°C) or (TEE < TEEGI)).
- main disconnect switch fuses are not blown.
- temperature TGEL is within correct operating limits ((TGEL>2°C) and (TGEL<70°C))

Availability of the unit for operation is reestablished if the default has been cleared:

- immediately after a manual reset,
- 2 minutes after an automatic reset.

- ***Remark :*** on PDVPC units with 2 water cooled heat exchangers, availability for operation is independent for each heat exchanger.

2 : Availability of the compressor for operation (DISPOn)

A compressor n (COMPn) is available for operation (DISPOn) if all the following conditions are satisfied :

- there are no low pressure defaults on circuit n, and the low pressure cut-out counter totals less than 4U
- there are no blown fuses or tripped thermic safety devices on the compressor
- the discharge temperature during operation of the compressur is not too high
- there are no HP defaults and the HP fault counter totals less than 3 U

Availability of the compressor for operation is reestablished if the default has been cleeared:

- immediately after a manual reset,
- two minutes after an automatic reset.

3 : Priority (PRI)

Variable PRI (address 233) enables harmoization of compressor and pump operation. It acts as indicated below:

PRI = 000

compressor start up priority
pump start up priority

PRI Value	Compressor starting order		
	2 compressors	3 compressors	4 compressors
000 ou 010	1, 2	1, 2, 3	1, 2, 3, 4
001 ou 011	2 ,1	3, 1, 2	4, 1, 2, 3
002 ou 012		2, 3, 1	3, 4, 1, 2
003 ou 031			2, 3, 4, 1

PRI Value	Order of pump priority
000 ou 001, 002, 003	1
010 ou 011, 012, 013	2

Starting order for compressor n (REG) depends directly on the number of control steps (THER variable) and the order of priority of compressor start-up.
The start-up priority of compressors changes every day (sequential priority).

- If a default appears on one or several compressors, the starting sequence is temporarily modified. This enables the unavailable compressor to be placed last in the order of priority.

Pump priority is changed every week

- if an electrical default appears on a pump during operation or if the pump is stopped due to a water flow default, the priority changes.
- PRI (address 233) : Starting priority
- REG (address 65) : Compressor 1 to 4 operating sequence

REG significance

value of REG	compressor operating sequence
0	0
2	1
4	2
6	1 and 2
8	3
10	1 and 3
12	2 and 3
14	1, 2 and 3
16	4
18	1 and 4
20	2 and 4
22	1, 2 and 4
24	3 and 4
26	1, 3 and 4
28	2, 3 and 4
30	1, 2, 3 and 4

- ***Remark :*** in PDVPC with 2 water cooled heat exchangers, priority is defined as follows :

PRI = 000

starting priority of compressors on circuit 1 and 2
starting priority of compressors on circuit 3 and 4

Value of PRI	Compressors starting sequence	
	circuit 1 & 2	circuit 3 & 4
000	1, 2	3,4
001	2 ,1	3, 4
100	1, 2	4, 3
101	2, 1	4, 3

VIII : DEFROSTING ON CIRCUIT n (PHD)

A unit coil may be defrosted if all the following conditions are satisfied :
- the unit is operating in the winter mode, WINTER (address 248)
- TEA < 10°C,
- the circuit n has not been defrosted for at least DGELS (time value),
  * if 10°C < TEA > -1°C, DGELS = 1 hour
  * if -1°C < TEA > -5°C, DGELS = 1,5 hours
  * if -5°C < TEA > -10°C, DGELS = 2 hours
  * if TEA < -10°C, DGELS = 4 hours
- the compressor is running (COMPn = 1)
- suction temperature is lower than +4°C (TSCAn)

Defrosting mode is maintained as long as the following conditions are satisfied:
- no cut-out intervenes through the HP safety switch,
- defrosting cycle time is lower than the maximum duration authorized (DDEGI < DDEGIS)

With:
- WINTER (address 87) : Winter control mode
- DGELS (address 76) : Minimum time delay between two defrost cycles
- DDEGI (address 246) : Time elapsed since start of the defrost cycle
- DDEGIS (address 205) : Maximum coil defrost duration
- PHD (address 72) : Order of defrost

DDEGIS can be modified using the display.

- ***Remark :*** On PDVPC units with 2 water cooled heat exchangers, 2 extra variables are included.

Where:
- HIVER (address 87) : Winter Control
- DGELS (address 76) : Minimum time delay between two defrost cycles
- DDEGI (address 246) : Time elapsed since start of the defrost cycle circuit 1 and 2
- DDEGI1 (address 247) : Time elapsed since start of the defrost cycle circuit 3 and 4
- DDEGIS (address 205) : Maximum coil defrost duration
- PHD (address 72) : Order of defrost circuit 1 and 2
- PHD1 (address 73) : Order of defrost circuit 3 and 4

OPERATING CONDITIONS

I : COMPRESSORS (COMPn) :

Starting of compressor n is possible if all the following conditions are satisfied:
- The compressor is available for operation (DISPOn = 1)
- The anti-short cycle delay has elapsed (ACCn = 1),
_ The compressor is being called to operate (REG see table)
- The remote ON/OFF switch is in the ON position (MAARD = 1)
- Current time is not within an unoccupied period
- Current time is not within a load-shedding period

The compressor is maintained in operation as long as the following conditions are satisfied:
- The compressor is available for operation (DISPOn = 1)
- The compressor is being called to operate (REG see table)
- The ON/OFF switch is in the ON position (MAARn=1).
- The remote ON/OFF switch is in the ON position (MAARD = 1)
- The software ON/OFF switch is enabled (MAARo > 0)
- Current time is not within an unoccupied period
- Current time is not within a load-shedding period

II : CIRCUIT N CYCLE INVERSION ELECTROVALVES (V4Vn)

An operating mode inversion electrovalve for circuits 1 and 2 or 3 and 4 is activated (V4V12 or 34 = 1) if all of the following conditions are satisfied:
- The WINTER control mode is being used (WINTER = 1)
- The circuits are not in the defrost mode (PHDn <> 1)

III : PUMPS

1 : Pump selection (CHPOMPE) :

The CLIMATIC is provided with the means of controlling one or two exchanger water circulating pumps .

If CHPOMPE = 1 , two pumps
CHPOMPE = 0 , one pump

Where :
CHPOMPE (address 55) : choice of the number of pumps.

- One pump : Cut the jumper on connector 7, input 0 of 24 logic input card. Pump 1 should be connected to relay A14 and its thermal protection (klixon) to connector 5, input 0.
- Twin pumps : Leave the jumper on connector 7, input 0 of 24 logic input card. Pump 1 should be connected to relay A14 and its thermal protection (klixon) to connector 5, input 0; pump 2 should be connected to relay A15 and its thermal protection (klixon) to connector 6, input 0.

2 : Operation (POMPEn)

A pump starts and is maintained in operation (POMPEn = 1) if all the following conditions are satisfied:

- It has been on an off cycle for at least 2 minutes,
- It is prioritary or only one pump has been selected (CHPOMPE = 0)
- There are no electrical defaults on the pump,
- At least on compressor ON/OFF switch is in the ON position
- The remote ON/OFF switch is in the ON position
- There is no water flow default

If outdoor temperature is lower than 1°C and if the machine is stopped, the pumps run to prevent the heat exchanger from freezing up.

Where :

- POMPEn (address 142 and 143) : Pompe 1 and 2

- ***Remark :*** On PDVPC units with deux water cooled heat exchangers, pump 1 is intended for use with the first water cooled heat exchanger, and pump 2 for use with the second water cooled heat exchanger.

IV : FANS (ventn)

The fan or fans are run (VENTn = 1) if all the following conditions are satisfied:

- No safety thermic protection device is tripped,
- None of the circuits is in the defrost mode, or the outdoor air temperature is above 3°C
- At least one compressor is running

If the Summer control mode is in operation and the outdoor air temperature is lower than 15°C, fan 2 is stopped if there is no thermic default on either fan.

Where

- VENTn (address 134 and 136) : Fan 1 and 2
- ELECV (address 52) : fan thermic safety devices 1 and 2

V : UNOCCUPIED OPERATING MODE (INOCCUP)

The unoccupied function enables stoppage of the complete unit (compressors and pumps) according to a daily and weekly schedule

- HMDRI (setpoint 08) : Hour and minute of start of daily unoccupied period,
- HMFRI (setpoint 09) : Hour and minute of end of daily unoccupied period,
- HJDRI (setpoint 10) : Hour and day of start of weekly unoccupied period,
- HJFRI (setpoint 11) : Hour and day of end of weekly unoccupied period.
- STOPINOC (setpoint 12) : override for given unoccupied days

The first day in the week is Sunday, the last day in the week is Saturday.

1 : clock override

The daily unoccupied function is not validated if HMDRI or HMFRI is greater than 240. The weekly unoccupied function is not validated if HJDRI or HJFRI is greater than 238.

2 : setpoint analysis

Hour and minute of the start of the unoccupied period

HMDRI = 000

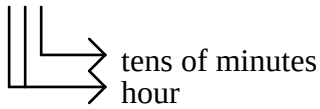

Hour and minute of the end of the unoccupied period

HFDRI = 000

Hour and day of the start of unoccupied period

HJDRI = 000

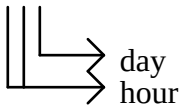

Hour and day of the end of the unoccupied period

HJFRI = 000

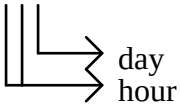

the hours, minutes or days of start or end of unoccupied periods are inclused in the unoccupied period.

3 : STOPINOC function

The STOPINOC function enables cancellation of unoccupied period on given days. If the cancellation affects several days in the week, add up the values of the days concerned:

Sunday = 2
Monday = 4
Tuesday = 8
Wednesday = 16
Thursday = 32
Friday = 64
Saturday = 128

STOPINOC	cancellation of unoccupied periods on the following day or days
0	0 day
2	sunday
4	monday
6	sunday + monday
8	tuesday
10	sunday + tuesday
12	monday + tuesday
14	sunday + monday + tuesday
16	wednesday
18	sunday + wednesday
20	monday + wednesday
22	sunday + monday + wednesday
24	tuesday + wednesday
26	sunday + tuesday + wednesday

28	monday + tuesday + wednesday
30	sunday + monday + tuesday + wednesday
32	thursday
34	sunday + thursday
36	monday + thursday
38	sunday + monday + thursday
40	tuesday + thursday
42	sunday + tuesday + thursday
44	monday + tuesday + thursday
46	sunday + monday + tuesday + thursday
48	wednesday + thursday
50	sunday + wednesday + thursday
52	monday + wednesday + thursday
54	sunday + monday + wednesday + thursday
56	tuesday + wednesday + thursday
58	sunday + tuesday + wednesday + thursday
60	monday + tuesday + wednesday + thursday
62	sunday + monday + wednesday + thursday
64	friday
66	sunday + friday
68	monday + friday
70	sunday + monday + friday
72	tuesday + friday
74	sunday + tuesday + friday
76	monday + tuesday + friday
78	sunday + monday + tuesday + friday
80	wednesday + friday
82	sunday + wednesday + friday
84	monday + wednesday + friday
86	sunday + monday + wednesday + friday
88	tuesday + wednesday + friday
90	sunday + tuesday + wednesday + friday
92	monday + tuesday + wednesday + friday
94	sunday + monday + tuesday + wednesday + friday
96	thursday + friday
98	sunday + thursday + friday
100	monday + thursday + friday
102	sunday + monday + thursday + friday
104	tuesday + thursday + friday
106	sunday + tuesday + thursday + friday
108	monday + tuesday + thursday + friday
110	sunday + monday + tuesday + thursday + friday
112	wednesday + thursday + friday
114	sunday + wednesday + thursday + friday
116	monday + wednesday + thursday + friday
118	sunday + monday + wednesday + thursday + friday
120	tuesday + wednesday + thursday + friday
122	sunday + tuesday + wednesday + thursday + friday
124	monday + tuesday + wednesday + thursday + friday
126	sunday + monday + tuesday + wednesday + thursday + friday
128	saturday
130	sunday + saturday
132	monday + saturday
134	sunday + monday + saturday
136	tuesday + saturday
138	sunday + tuesday + saturday
140	monday + tuesday + saturday
142	sunday + monday + tuesday + saturday
144	wednesday + saturday
146	sunday + wednesday + saturday
148	monday + wednesday + saturday
150	sunday + monday + wednesday + saturday
152	tuesday + wednesday + saturday
154	sunday + tuesday + wednesday + saturday
156	monday + tuesday + wednesday + saturday

158	sunday + monday + wednesday + saturday
160	thursday + saturday
162	sunday + thursday + saturday
164	monday + thursday + saturday
166	sunday + monday + thursday + saturday
168	tuesday + thursday + saturday
170	sunday + tuesday + thursday + saturday
172	monday + tuesday + thursday + saturday
174	sunday + monday + tuesday + thursday + saturday
176	wednesday + thursday + saturday
178	sunday + wednesday + thursday + saturday
180	monday + wednesday + thursday + saturday
182	sunday + monday + wednesday + thursday + saturday
184	tuesday + wednesday + thursday + saturday
186	sunday + tuesday + wednesday + thursday + saturday
188	monday + tuesday + wednesday + thursday + saturday
190	sunday + monday + tuesday + wednesday + thursday + saturday
192	friday + saturday
194	sunday + friday + saturday
196	monday + friday + saturday
198	sunday + monday + friday + saturday
200	tuesday + friday + saturday
202	sunday + tuesday + friday + saturday
204	monday + tuesday + friday + saturday
206	sunday + monday + tuesday + friday + saturday
208	wednesday + friday + saturday
210	sunday + wednesday + friday + saturday
212	monday + wednesday + friday + saturday
214	sunday + monday + wednesday + friday + saturday
216	tuesday + wednesday + friday + saturday
218	sunday + tuesday + wednesday + friday + saturday
220	monday + tuesday + wednesday + friday + saturday
222	sunday + monday + tuesday + wednesday + friday + saturday
224	thursday + friday + saturday
226	sunday + thursday + friday + saturday
228	monday + thursday + friday + saturday
230	sunday + monday + thursday + friday + saturday
232	tuesday + thursday + friday + saturday
234	sunday + tuesday + thursday + friday + saturday
236	monday + tuesday + thursday + friday + saturday
238	sunday + monday + tuesday + thursday + friday + saturday
240	wednesday + thursday + friday + saturday
242	sunday + wednesday + thursday + friday + saturday
244	monday + wednesday + thursday + friday + saturday
246	sunday + monday + wednesday + thursday + friday + saturday
248	tuesday + wednesday + thursday + friday + saturday
250	sunday + tuesday + wednesday + thursday + friday + saturday
252	monday + tuesday + wednesday + thursday + friday + saturday
254	sunday + monday + tuesday + wednesday + thursday + friday + saturday

STOPINOC enables cancellation of unoccupied periods on the days programmed from 0 hours to 0 hours.

4 : Exemple:

We want to stop the machine every day at 20:30 until 06:40 the next day, on Friday at 22:00 until 8 am Monday morning and to cancell unoccupied periods on Tuesday and Thursday :
Input the following setpoints:

- setpoint n°8 HMDRI = 203 (start at 20 hours and 30 minutes)
- setpoint n°9 HMFRI = 064 (end at 6 hours and 41 minutes)
- setpoint n°10 HJDRI = 226 (as from 22 hours on Friday)
- setpoint n°11 HJFRI = 072 (end at 8 hours on Monday)

- setpoint n°12 STOPINOC = 40 (cancellation of unoccupied periods on Tuesday and Thursday)

VI : RESTART FUNCTION

The restart function allow the running of the unit in vacant period if the external ait temperature is below the air température for restart the unit running during vacant period (setting point n°15). The water température which is calculated by climatic is then decrased by 5°C. The restart function runs only during winter control period.

with:

CRELANCE : (setting point n°15) air température for restart the unit, in degrée

RELANCE : (adresse 61) order for the unit run if in vacant function

VII : ON / OFF UNOCCUPIED PERIOD

The ON / OFF unoccupied period function (MAARI) cancels unoccupied period fonction. The ON / OFF must be closed for enabling the inuccupied period function

with:

MAARI (adress 62): unoccupied period ON / OFF

VIII : LOAD-SHEDDING FUNCTION (EJP)

During load-shedding, (e.g. EJP) the compressors are stopped, the water circulating pumps continue to operate only during winter operation.

with:

EJP (address 58): Load-shedding signal

IX : BOILER BACKUP

If the controlled water temperature is equal to the maximum permitted water temperature (TEECS) and unit capacity is insufficient to maintain the required temperature level (THER = 041), a backup boiler starting signal should be programmed (TCHAUD = ON). This starting signal should effectively be given within 21 minutes (CHAUD = ON). The CLIMATIC does not control boiler operation, it simply gives authorization to start running.

Effective boiler start-up authorization signal (CHAUD = 1) is sent through relay A9

DUring load-shedding periods, boiler start-up authorization is given immediately if the actual water temperature is lower than the desired water temperature.

Where:

CHAUD (address : 137) : Boiler control.

TCHAUD (address : 66) : Boiler start-up programming address

- ***Remark :*** on PDVPC units with deux water cooled heat exchangers, the Climatic has 2 boiler control signals, one for each exchanger. Regulation takes place exactly as explained above. Two extra variables are integrated for controlling the second boiler.

Where:

CHAUD1 (address : 140) : Boiler control for second water cooled heat exchanger

TCHAUD1 (address : 67) : Boiler start-up programming address for second heat exchanger.

X : REMOTE ON/OFF

The remote ON/OFF switch stops both the compressors and the pumps. It should be connected to input X12, contact 1.

Where:

MAARD : (address 56) : Remote ON/OFF

XI : CONTROL OF THE WATER EXCHANGER ANTI-FREEZE HEATER

Heaters run if:

- pumps are stopped
- no flow
- external ait temperature less than 1°C
- water température in echanger less than 10°C

Heaters keeping in opération if :

- pumps are stopped
- no flow
- external ait temperature less than 1°C
- water température in echanger less than 50°C

XII : GENERAL ALARM (ALARM)

The alarm light lights up and the fault transmission relay is activated if a default has been present on the unit for at least 6 minutes (see list of defaults).

Where:

ALARM: (address: 135)

DEFAULTS

The PANNE variable (address 255) is assigned to default logging and display. One or several three figure numbers will flash on and off on the display in the event of a default.

I : DEFAULT CODE DEFINITION

As a general rule, the default code is a 2 figure number, where :
Units indicate the type of default,
The figure in the tens column indicates which circuit the default is on.
If the figure in the tens column is a 0, the default concerns unit operation
If the figure in the tens column is a 9, the default concerns accessories.

II : DIFFERENT DEFAULT CATEGORIES

- IMPERATIVE DEFAULTS : cause unit stoppage and lockout
- SECONDARY DEFAULTS : cause stoppage without lockout (re-starting is possible after clearance of the default and the time delay required for automatic resetting)
- DEFAULTS WITHOUT EFFECT : do not cause stoppage but are signalled on the display

A memory bank stores the code number of the last default to have appeared.

III : DEFAULTS AND DEFAULT CODES

1 : UNIT DEFAULT

DEFAULT = 001

Exchanger entering water temperature (TEE) is too low or too high. The unit is stopped.
If water temperature TEE rises and attains TEEGI+2C, or if the temperature drops to 60°C, the default clears itself and the unit can re-start.

with:

TEE : (address 1) exchanger entering water temperature

- Remark : on PDVPC units with two water cooled heat exchangers, the Climatic has two exchanger entering water temperature defaults:

001 default on the first water cooled heat exchanger
101 default on the second water cooled heat exchanger

with

TEE : (address 0) exchanger 1 entering water temperature
TEE2 : (address 11) exchanger 2 entering water temperature

DEFAULT = 003

Flow switch has detected a default.

If the default persists for longer than 20s, the pump currently in operation is stopped and the second pump is started. If the default still persists then the alarm signal is activated and the unit can only be re-started after a manual reset. SDEB signals this default (see table).

with:

SDEB : (address 243) Flow default

value de SDEB	Flow default with pump n°
000	0 pump
001	pump 1
010	pump 2
011	pump 1 and pump 2

- ***Remark :*** on PDVPC units with two water cooled heat exchangers, lthe Climatic has two water flow defaults:

003 : flow default on the first water cooled heat exchanger
103 : flow default on the second water cooled heat exchanger
each water cooled heat exchanger only has one pump

with:

SDEB : (address 243) flow default

DEFAULT = 006

Main disconnect switch fuse(s) blown or main disconnect switch open. The unit is stopped, the alarm is activated

with:

ELECG : (address 57) main disconnect switch fuses blown

- ***Remark :*** on PDVPC units with two water cooled heat exchangers, the Climatic has two main disconnect fuse blown defaults, even though there is only a single disconnect switch on the unit..

106 main disconnect switch fuses blown

DEFAULT = 007

Defaut on compressor cranckase heater electrical supply. The unit is off, alarm signal is on

with:

PTRC: (adress 63) voltage on compressor crankcase heaters

DEFAULT =009

Temperature of the water inside the water cooled heat exchanger is too low or too high, there is a risk of freeze-up (TGEL < 4°C) or risk of shut-down on high pressure (TGEL > 70°C).
The unit is stopped.
Variable SGEL takes on the value of 1U when this default occurs.
If temperature TGEL rises and attains 4°C or drops and attains 65°C the unit can be started again.

with:

TGEL (address 10) water temperature inside the water cooled heat exchanger

- ***Remark :*** on PDVPC units with two water cooled heat exchangers, the Climatic has two freeze-up defaults, one for each water cooled heat exchanger.:

009 : défaut gel premier water cooled heat exchanger

109 : défaut gel deuxième water cooled heat exchanger

with:

TGEL (address 10) water temperature inside water cooled heat exchanger N°1

TGEL2 (address 89) water temperature inside water cooled heat exchanger N°2

2 : ACCESSORY DEFAULT

DEFAULT = 090

Fan motor thermal protection tripped

Fan stops immediately, alarm is activated

Variable ELECV signals the default

with:

ELECV :(address 52) fan thermal protection default

DEFAULT = 091

Pump 1 thermal relay tripped

Pump 1 stops immediately, the alarm is activated

Variable ELECP1 signals the default

with:

ELECP1 :(address 53) Pump 1 thermal relay default

DEFAULT = 092

Pump 2 thermal relay tripped

Pump 2 stops immediately, the alarm is activated

Variable ELECP1 signals the default

with:

ELECP1 :(address 54) Pump 2 thermal relay default

DEFAULT = 099

A compressopr suction temperature sensor (TSCAn) or the outdoor air Ttemperature sensor (TAE) is faulty. The alarm signal is activated.

If the outdoor air temperature sensor is inoperative (open) (-28°C) coil defrosting will be authorized every 60 minutes and the machine will change over to the winter control mode if automatic changeover is authorized.

If the outdoor air temperature sensor is shorted (99°C), the machine will chage over to summer control mode if automatic changeover is authorized.

3 : COMPRESSOR DEFAULT

n number of the compressor concerned by the default

DEFAULT = 0n1

The low pressure switch is transmitting information incompatible with the operating condition of the compressor(s).

The low pressure switch is cut-out but the compressors are running. Variable SBPn indicates alow pressure default.

Four low pressure safety cut-outs are allowed per day. Beyond this number, circuit n will not be able to start again without manual reset.

Cooling circuit n is immediately shut down, the alarm signal is activated.

with:

SBPn : (address 235 => 238) compressor 1 to compressor 4 LP default

SBPn = 000

nomber of low pressure fault
présence of a fault

value de SBPn	résult
000	0 défaults
101	presence of a default and one LP default
001	one LP default
102	presence of a default and two LP defaults
002	two LP defaults
103	presence of a default and three LP defaults
003	hree LP defaults
104	presence of a default and four LP defaults

DEFAULT = 0n5

High pressure too high (detected on S).

Compressor n is stopped immediately, the alarm signal is activated.

The high pressure default counter (TOHPn) is incremented by a value of 1.

If the default disappears, compressor n can start up again, except when there have been more than 2 HP safety switch trip-outs on the same day (TOHPn>2U).

with:

TOHPn :(address de 239 => 242) compressor 1 to compressor 4 HP default

DEFAULT = 0n6

Discharge temperature on compressor n is too high (TREFn>250U).

Compressor n is stopped and the alarm signal is activated.

If the default disappears, compressor n can be started again.

with:

TREFn :(address 20, 21, 24, 25) discharge temperature, compressor 1 to 4 in "U" units

DEFAULT = 0n7

Motor winding thermal protection on compressor n has tripped or superheat is not correct. This is detected through insufficient discharge temperature elevation (TREFn<40°c) on the compressor, despite two minutes of operation.

The alarm signal is activated when this condition has been detected for 6 minutes.

DEFAULT = 0n8

One or several fuses blown or or compressor n fuse holder opened.

Compressor n is immediately stopped and the alarm signal is activated.

with:

ELECn :(address 48 =>51) compressor 1 to 4 blown fuse detection

COUNTERS, TOHPn AND SBPn, ARE AUTOMATICALLY RESET TO ZERO EVERY DAY AT 00H00 IF THEY HAVE NOT REACHED THEIR MAXIMU AUTHORIZED VALUE.
ALL SAFETY TRIP coUNTErs CAN BE MANUALLY RESET BY PRESSING THE "+", "-" AND "V" KEYS ON THE DISAPLY SIMULTANEOUSLY.

With:

Default code variables (PANM, PANn) take on the value of the DEFAULT variable according to the default observed.

The aim of this function is to maintain in memory (even if the Climatic is switched off) the last default to have affected either the unit, the fan or compressor n.

Default codes can be zeroed manually by pressing the "+", "-" and V keys on the display simultaneously.

Example : Compressor 2 HP safety switch trip-out.

- DEFAULT variable changes to 025 and flashes on and of on the unit display.
- Compressor 2 is stopped.
- Default code PAN2 takes on the value od 025.
- The alarm warning light is lit.
- The unit resets automatically if the default has disappeared after 2 minutes and if counter TOHP2 is lower than 3U.
- The alarm warning light is turned off.
- DEFAULT variable becomes 000.
- The compressor can start again if required.
- Default code PAN2 remains at a value of 025 until the next default appears on this compressor.
- Display reverts to the preset temperature value..

VARIABLE DEFINITIONS

UNITS USED :	- C = DEGREES CENTIGRADE	-28 to +99,5
	- U = UNITS	0 U to 255 U
	- L = LOGIC	0 or 1
	- K = DIFFERENTIAL	0 to 127,5 K

A - SENSOR INPUTS

0	T0	TEA	C	ambient air temperature
1	T1	TEE	C	entering water temperature
2	T2	TSCA1	C	suction temperature circuit 1
3	T3	TSCA2	C	suction temperature circuit 2
4	T4	TREF1	C	discharge temperature compressor 1
5	T5	TREF2	C	discharge temperature compressor 2
6	T6	TSCA3	C	suction temperature circuit 3
7	T7	TSCA4	C	suction temperature circuit 4
8	T8	TREF3	C	discharge temperature compressor 3
9	T9	TREF4	C	discharge temperature compressor 4
10	T10	TGEL	C	cooler water temperature
11	T11	TEE2	C	entering water temperature
12	T12	TGEL2	C	cooler water temperature

B - CONTACT INPUTS

20	TREF1U	U	discharge temperature, compressor 1(U units)
21	TREF2U	U	discharge temperature, compressor 2(U units)
24	TREF3U	U	discharge temperature, compressor 3(U units)
25	TREF4U	U	discharge temperature, compressor 4(U units)
31	S0	U	

C - INTERNAL VARIABLES

32	MAAR1	L	on/off compressor 1
33	MAAR2	L	on/off compressor 2
34	MAAR3	L	on/off compressor 3
35	MAAR4	L	on/off compressor 4
36	SETH	L	changeover of the first 4 setpoints
37	PERMREG	L	manual control changeover
38	AUTO	L	automatic control changeover
39	SET	L	key for modifying TEAU
40	PHP1	L	high pressure switch compressor 1
41	PHP2	L	high pressure switch compressor 2
42	PHP3	L	high pressure switch compressor 3

43	PHP4	L	high pressure switch compressor 4
44	PBP1	L	low pressure switch compressor 1
45	PBP2	L	low pressure switch compressor 2
46	PBP3	L	low pressure switch compressor 3
47	PBP4	L	low pressure switch compressor 4
48	ELEC1	L	blown fuse, thermal protection compressor 1
49	ELEC2	L	blown fuse, thermal protection compressor 2
50	ELEC3	L	blown fuse, thermal protection compressor 3
51	ELEC4	L	blown fuse, thermal protection compressor 4
52	ELECV	L	blown fuse, thermal protection ventilateurs
53	ELECP1	L	blown fuse, thermal protection pump 1
54	ELECP2	L	blown fuse, thermal protection pump 2
55	CHPOMPE	L	pump number selection
56	MAARD	L	remote on/off
57	ELECG	L	main disconnect fuse(s) blown
58	EJP	L	ejp (peak day load-shedding)
59	FS	L	flow switch, water cooled heat exchanger n° 1
60	FS1	L	flow switch, water cooled heat exchanger n° 2
61	RELANCE	L	order for the unit run if in vacant function
62	MAARI	L	unoccupied period on / off
63	PTRC	L	voltage on compressor crankcase heaters
64	THER	U	number of steps requested
65	REG	U	compressor control sequence
66	TCHAUD	L	control sequence number, boiler n° 1
67	TCHAUD1	L	control sequence number, boiler n° 2
68	ACC1	L	short-cycle protection compressor 1
69	ACC2	L	short-cycle protection compressor 2
70	ACC3	L	short-cycle protection compressor 3
71	ACC4	L	short-cycle protection compressor 4
72	PHD	L	defrost cycle
73	PHD1	L	defrost cycle (in PDVPC with 2 water cooled heat exchangers)
74	CASC	L	compressor cascade start-up
75	INOCCUP	L	unoccupied order
76	DGELS	U	minimum time lapse between defrost cycles
77	DISPO1	L	availability compressor 1
78	DISPO2	L	availability compressor 2
79	DISPO3	L	availability compressor 3
80	DISPO4	L	availability compressor 4
81	DISPOM	L	availability of the unit
82	DISPOM1	L	availability of the unit (PDVPC with 2 water cooled heat exchangers)
83	DEFAUT	L	existence of a default
84	LEC	L	relay variable
85	AUTOSET	L	relay variable
86	ETE	L	summer control order
87	HIVER	L	winter control order
88	STOP	L	stopping the machine because TEA<STOPAIR

D - SIGNAL OUTPUTS

128	A0	COMP1	L	compressor 1
129	A1	COMP2	L	compressor 2
130	A2	V4V12	L	4 way cycle inversion valve

131	A3	COMP3	L	compressor 3
132	A4	COMP4	L	compressor 4
133	A5	V4V34	L	4 way cycle inversion valve
134	A6	VENT1	L	fan 1
135	A7	ALARM	L	alarm
136	A8	VENT2	L	fan 2
137	A9	CHAUD	L	order of priority of boiler cut-in circuit 1 and 2
138	A10	DEFAUT	L	Light fault
139	A11	RGEL	L	Anti-freeze heater
140	A12	CHAUD1	L	order of priority of boiler cut-in circuit 3 and 4 (for PDVPC with 2 water cooled heat exchangers)
141	A13	SAISON	L	summer or winter season indicator (summer = 1 circuit 1 and 2)
142	A14	POMPE1	L	pump 1
143	A15	POMPE2	L	pump 2

E - 24 LOGIC INLETS CARD

169	S1	U	0 : remote on/off 1 : main disconnect switch fuse blown 2 : flow switch, cooler n° 1 3 : flow switch, cooler n° 2 4 : thermal protection ventilateur 1 and 2 5 : thermal protection pump 2 6 : thermal protection pump 1 7 : pump number selection
170	S2	U	0 : ejp 1 : unoccupied period on / off 2 : summer/winter changeover circuit 1 and 2 3 : voltage on compressor crankcase heaters 4 : blown fuse, thermal protection compressor 1 5 : blown fuse, thermal protection compressor 2 6 : blown fuse, thermal protection compressor 3 7 : blown fuse, thermal protection compressor 4
171	S3	U	0 : low pressure switch compressor 1 1 : low pressure switch compressor 2 2 : low pressure switch compressor 3 3 : low pressure switch compressor 4 4 : high pressure switch compressor 1 5 : high pressure switch compressor 2 6 : high pressure switch compressor 3 7 : high pressure switch compressor 4

F - HOUR COUNTER VARIABLES

165	NCAR	U	number of the card
166	PRECAR	U	determination of quantity cards unked eachother
176	TO00	U	hour counter, compressor 1 (0 to 240 minutes)
177	TO01	U	hour counter, compressor 1 (1 unit = 4 hours)

178	TO02	U	hour counter, compressor 1 (1 unit = 1000 hours)
179	TO10	U	hour counter, compressor 2 (0 a 240 minutes)
180	TO11	U	hour counter, compressor 2 (1 unit = 4 hours)
181	TO12	U	hour counter, compressor 2 (1 unit = 1000 hours)
182	TO20	U	hour counter, compressor 3 (0 a 240 minutes)
183	TO21	U	hour counter, compressor 3 (1 unit = 4 hours)
184	TO22	U	hour counter, compressor 3 (1 unit = 1000 hours)
185	TO30	U	hour counter, compressor 4 (0 a 240 minutes)
186	TO31	U	hour counter, compressor 4 (1 unit = 4 hours)
187	TO32	U	hour counter, compressor 4 (1 unit = 1000 hours)

G - SETPOINTS

These variables are stored in memory when the Climatic is switched off.
Some of them can be modified using the unit display.

192	Setpoint 00	CONSE	C	water setpoint (gradient origin summer or winter control) set with key n° 10
193	Setpoint 01	CONSA	C	air setpoint (gradient origin summer or winter control) set with key n° 10
194	Setpoint 02	PENTE	U	summer or winter control gradient set with key n° 10
195	Setpoint 03	STEE	C	minimum or maximum entering water temperature set with key n° 10
196	Setpoint 04	TAREH	C	air temperature for summer regulation or air temperature for winter regulation set with key n° 10
197	Setpoint 05	DIFET	K	differential between control steps
198	Setpoint 06	ENCL	K	working differential of a control step
199	Setpoint 07	STOPAIR	C	
200	setpoint 08	HMDRI	U	hour and minute of the start of unoccupied mode control
201	Setpoint 09	HMFRI	U	hour and minute of the end of unoccupied mode control
202	Setpoint 10	HJDRI	U	hour and day of the start of unoccupied mode control
203	Setpoint 11	HJFRI	U	hour and day of the end of unoccupied mode control
204	Setpoint 12	STOPINOC	U	cancellation of unoccupied mode control on given days
205	Setpoint 13	DDEGIS	U	maximum duration of defrost cycle
206	Setpoint 14	TEAU	C	controlled water temperature setpoint
207	Setpoint 15	CRELANCE	C	air température for restart the unit

H - INTERNAL VARIABLES

These variables are maintained in memory when the Climatic is switched off.

208	TEAU0	C	controlled water temperature setpoint (card 0)
209	TEAU1	C	controlled water temperature setpoint (card 1)
210	TEAU2	C	controlled water temperature setpoint (card 2)
211	ETEM	L	summer control order
212	HIVERM	L	winter control order
213	PRIM	U	unit starting priority
214	REL0	U	realy variable

215	REL1	U	realy variable
216	REL2	U	realy variable
224	CONSEE	C	water temperature setpoint (gradient origin, summer control)
225	CONSAE	C	air temperature setpoint (gradient origin, summer control)
226	PENTEE	U	summer control gradient
227	CONSEH	C	water temperature setpoint (gradient origin, winter control)
228	CONSAH	C	air temperature setpoint (gradient origin, winter control)
229	PENTEH	U	winter control gradient
230	TEEGI	C	minimum chilled water entering temperature
231	TEECS	C	maximum hot water entering temperature
232	TARETE	C	air temperature for summer regulation
233	TARHIV	U	air temperature for winter regulation
234	PRI	U	pump and compressor starting priority
235	SBP1	U	low pressure default counter, compressor 1
236	SBP2	U	low pressure default counter, compressor 2
237	SBP3	U	low pressure default counter, compressor 3
238	SBP4	U	low pressure default counter, compressor 4
239	TOHP1	U	high pressure default counter, compressor 1
240	TOHP2	U	high pressure default counter, compressor 2
241	TOHP3	U	high pressure default counter, compressor 3
242	TOHP4	U	high pressure default counter, compressor 4
243	SDEB	U	flow default
244	DGEL12	U	time elapsed since last defrost cycle compressor 1 and 2
245	DGEL34	U	time elapsed since last defrost cycle compressor 3 and 4
246	DDEGI	U	time elapsed since the beginning of the defrost cycle
247	DDEGI1	U	time elapsed since the beginning of the defrost cycle (on PDVPC with 2 water cooled heat exchangers)
249	PAN1	U	default code, compressor 1
250	PAN2	U	default code, compressor 2
251	PAN3	U	default code, compressor 3
252	PAN4	U	default code, compressor 4
253	PANM	U	default code, machine
254	PANM1	U	default code, machine (on PDVPC with 2 water cooled heat exchangers)
255	PANNE	U	default