Liebert HIROSS

High Performance Air Conditioning

Superchiller 2000

Product Documentation

English

cod. 272080 – rev. 18.01.2002

Issued by TDS

Index

1 – Foreword

With Superchiller 2000 it is presents a complete range of packaged air cooled water chillers with integrated freecooling device. The Superchiller can be identified according to the following nomenclature:

SBHxx2

Refrigerant:
2 R22
7 R407C

Size:
xx Cooling capacity (kW x 10)

H Hermetic scroll compressor
R Reciprocating semihermetic compressor

Version:
B Base version
L Low noise version

Series:
S Superchiller

1.1 – Frame

Adapted for outdoor applications, this is made up by:

Base in modular profiles of folded galvanized steel plates, painted RAL 7032, interconnected using special rivets with elevated mechanical characteristics; nuts and bolts are used only to block compressors.

Frame made up of horizontal and vertical sections in modular polyester powder (RAL 7032) painted galvanized steel plate, interconnected using special rivets with elevated mechanical characteristics.

Panels in polyester powder (RAL 7032) painted galvanized steel plate.

Galvanized and Dracomet Screws.

Compressor vane separated from the air flow and with closed bottom.

In all the models the compressor compartment is coated with a special sound–proofing material, made up of 35–mm thick rusticated polyurethane, with an embedded high density sound–insulating diaphragm.

In the SLR models, the bottom of the compressor compartment is further coated with a washable sound–proofing material, made up of polyester and polyurethane (40 mm) with an embedded double lead foil.

1.2 – Refrigeration circuit

Refrigerant and lubrication:

R407C with polyester oil (standard)

R22 with mineral oil.

Compressors:

Series SBH, SLH

Scroll hermetic compressors with thermal protection and crankcase heater;

- Models 05 ÷ 08 in single configuration for each refrigerating circuit.
- Models 10 ÷ 17 in tandem configuration for each refrigerating circuit.

Series SBR, SLR

Reciprocating semihermetic compressors with electronic protection, oil differential pressure switch, heater crankcase, suction and discharge shut–off valve.

- Models 21 ÷ 34, 75 in single configuration for each refrigeration circuit with part–winding start device and capacity control fitted as standard.
- Models 43 ÷ 68 in twin configuration for each refrigeration circuit.

In the SLR version, the compressors are fastened on spring supports at the bottom and connected with the refrigeration circuit with suction and delivery hoses with mufflers on the discharge circuit are fitted as standard.

Evaporator:

Single plate evaporator (on SBH, SLH units) with true dual circuit technology

Shell and tube evaporator (on SBR, SLR units) with ISPESL safety valve on 25 ÷ 75 models

All evaporators have closed cell insulation, 2 circuits refrigerant side, 1 circuit water side.

Condenser coils with copper tubes and aluminium fins with subcooler circuits.
In the technical data tables the type of installed coils is indicated.

FC coils with copper tubes and aluminium fins separated from condensing coils in SBH, SLH models.
In the technical data tables the type of installed coils is indicated.

Independent refrigeration circuits, each featuring thermostatic expansion valve, antiacid filter dryer (with interchangeable elements starting from 10 model), liquid and humidity sight glass, fuse tap on 05 ÷ 08 models, HP safety valve in high pressure side starting from 10 models, charge connections, solenoid valves and manual shut off valve on liquid line.
Only on SBR, SLR models: refrigerant gauges for each circuit; oil gauges for each compressor.
Only on SLR models: discharge line mufflers, discharge and suction flexible pipes.
Pressure switches: refrigerant high pressure switch (manual reset), low pressure switch (automatic reset), oil differential pressure switch with delay for SBR, SLR models only.

1.3 – Hydraulic circuit

The hydraulic circuit is made up of both carbon steel and flexible EPDM pipes connected with threaded joints in the models SBH ÷ SLH; with carbon steel pipes connected with stiff grooved joints Gruvlock in the models SBR ÷ SLR.

The hydraulic circuit is equipped with: low pressure drop three–way valve with modulating servocontrol, flow switch (for the versions with double pump, it enables the rotation), air purge valves and water discharge valves.The maximum operating pressure of the hydraulic circuit is 6 bar.
An adjustment valve (SBH–SLH unit) or a calibrated baffle (SBR–SLR unit) is standard installed in the by–pass section of the free–cooling coils (see hydraulic scheme) to keep the circuit pressure drop constant when the position of the three–way valve changes; this device further prevents dangerous variations of the water flow to the evaporator.
A metal filter protection for the plate evaporator is standard supplied on the models SBH–SLH.

Hydraulic circuit insulation for SBR –SLR units are made by particular close cell synthetic elastomer for outdoor installation (high resistance to ultraviolet rays).

CAUTION: the Superchiller can only be filled with water/glycol mixtures with percentages depending on the min. temperatures expected for the outdoor air; the automatic filling device must be disconnected from the hydraulic circuit at the end of this step; the system filling must be made with water/glycol mixture in the prescribed percentage only.

1.4 – Fan section

Vertical expulsion axial fans, complete with safety protection grille and nozzle.

Fans have 3–phase, 6 poles motors with IP54 protection and class F insulation, complete with thermal protection.

On SB units fans are delta powered (~900 RPM), on SL units fans are star powered (~680 RPM).

Each fan is protected by an independent safety switch, so as to ensure a continuous unit operation in case of fan "failure".

1.5 – Control and regulation

MICROFACE electronic microprocessor control with displayed digital indication of water unit inlet and outlet, evaporator inlet and ambient temperature, high pressure indication of both cooling circuits, as well as all (with variable setting possibility) working parameters, like multiple outlet setpoints, settings for free-cooling changeover, independent working hour counters for pumps, both compressors (or cooling circuits with tandem compressors) and freecooling working mode amount.

The microprocessor control also contains various functions like automatic restart after power failure (selectable restart time), antifreeze protection with temperature sensor (selectable value), periodical pumps rotation and in case of failure (only for units with double pumps), compressor rotation for working hours equalization, remote on/off input function and voltfree contacts for remote alarm indication.

The alarm management contains alarm messages in abbreviation (3 digits) and their code number, alarm led and voltfree contact to remote the signal. Condenser control is managed by the microprocessor control with different strategies during compressor, freecooling and mixed operating mode: there is a software algorithm to change the condensing set point depending on the working mode, either mechanical cooling or free cooling plus mechanical cooling. The Condenser fans can be driven by steps (standard on SBR models) or modulating fan speed controller (standard on SBH–SLH–SLR models).

It is possible to select an automatic water outlet set point shifting, driven by the ambient temperature gradient.

All modifications in the user–friendly menu of the display in the Superchiller are password protected.

In multiple units configuration (up to 16 Superchillers) the MICROFACE microprocessor controls can be connected together via HIROBUS–cable, to enable the "Teamwork". This will organize the working hours equalization of all components over the system, will take care about the proper order and number cooling circuits starting according the cooling load. The teamwork also allows to select standby units, which will be rotated frequently and in case of an alarm of one of the duty units. To enable the teamwork only bus–cables but no additional hardware is necessary.

1.6 – Electrical panel

According to IEC standards.

Supply 400+/– 10% V/3/50HZ + PE.

Auxiliary supply circuit at 230V/1/50HZ and 24V for the unit SBR, SLR.

Auxiliary supply circuit at 24V/1/50HZ for the unit SBH, SLH.

Wire according to safety IEC norms (EN60204–1) with panel blocking main switch.

Protection MCB for compressor on SBH, SLH models.

Fuses protection for compressors on SBR, SLR models.

MCBs for each fan.

Contactors for fan and compressors.

Compressor manual operation through Microface controller.

Voltage free contact for remote ON–OFF input function.

Voltage free contacts for remote indication of:

- Compressor ½ in operation
- Pump/s in operation
- General alarm

Electrical panel accessed by door with external main switch.

1.7 – Test and packing

All units are tested during and after production, before delivery, according to internal factory procedures for product Quality Assurance. Units are supplied both with refrigerant and oil charge.

Units are packed with plastic film protection, complete with tubes for unit lifting.

1.8 – Final tests and reference norms

The Quality Management System of Liebert – HIROSS S.p.A. High Performance Air Conditioning has been approved by Lloyd's Register Quality Assurance to the quality management system standard ISO 9001:2000.

The product conforms to European Union directives 98/37/CE (89/392/CEE; 91/368/CEE; 93/68/CEE), 89/336/CEE; 73/23/CEE; 97/23/CE.

Units are supplied complete with a test certificate and conformity declaration and control component list.

Superchiller 2000 units are CE marked as they comply with the European directives concerning mechanical, electrical, electromagnetic and pressure equipment safety.

1.9 – Warranty clauses

The warranty does not apply for any damage or malfunctioning that may occur during or as a result of operations not complying with the application values. The company is not responsible for damages due to incorrect or improper use of the product and it reserves the right to change technical specifications without any prior notice.

1.10 – Special versions (on request)

If not specified otherwise, the chillers will comply with the European norms standardized with PED 97/23/EC.

- Other special optionals are: UDT, GOST
- Partial heat recovery 20% with anti – frost heater
- Alucoat or copper – copper coils
- Packaging with wooden box
- Automatic magneto – thermal switches for each compressor (special for SBR – SLR units only; standard for SBH – SLH units)
- Start up "Soft start" for compressors
- Fan and/or pump timing
- Versions with electrical power supply different from the standard one
- Grille kit for anti – intrusion protection
- Low noise kit for pump (only SBR – SLR models)

Detailed informations on standard or special accessories are displayed on following Table.

1.11 – Accessories and available versions

ACCESSORIES	SBH	SBR	SLH	SLR
4 steps for the capacity control	STD from SBH 10	STD	STD from SBH 10	STD
Condensation control with fans step	N. A.	STD	N. A.	N. A.
Condensation control with continuous variation of the fans speed	STD	OPT	STD	STD
Refrigerant gas R22	OPT	OPT	OPT	OPT
UDT, GOST standards	SPEC	SPEC	SPEC	SPEC
Buffer tank with pressure gauge, connection for the filling unit, air purge and discharge valves	OPT	OPT	OPT	OPT
Pump group: • 1 pump, 2 poles, with standard head • 2 pumps, 2 poles, with standard head • 1 pump, 2 poles, with high head • 2 pumps, 2 poles, with high head • 2 pumps, 4 poles, with standard head (not available on SBH models)	OPT	OPT	OPT	OPT
Flow switch installed on board	STD	STD	STD	STD
Mechanical filter for the hydraulic protection of the plate exchanger supplied as standard (not installed)	STD	N.A.	STD	N.A.
Hydraulic kit, made of: • expansion tank, safety valve 3.5 bar	OPT	OPT	OPT	OPT
Automatic magneto–thermal switches for each compressor	STD	SPEC	STD	SPEC
Electrical accessories: • power factor correction device cosΦ=0.9 or	OPT	OPT	OPT	OPT
Control system with remote ICON Hiromatic on closed board IP40, to remote control up to 16 Superchillers with recording of the operating parameters, *help on line* for the service, complete with RS422 serial connection	OPT	OPT	OPT	OPT
High/low pressure refrigerant gauges	OPT	STD	OPT	STD
Pump down	N.A.	OPT	N.A.	OPT
Coil protection: • anti–leaf metal filters	OPT	OPT	OPT	OPT
Partial heat recovery (20%) with anti–frost heater	SPEC	SPEC	SPEC	SPEC
Surface treatment on finned coils: • ALUCOAT treatment with epoxy painting or • coils with copper pipes and fins	SPEC	SPEC	SPEC	SPEC
Packing in wooden case	SPEC	SPEC	SPEC	SPEC
Evaporator electric heaters and/or Electric heaters for tank with safety thermostat	OPT	OPT	OPT	OPT
Anti–vibration supports: • in rubber for std units • in rubber for units with tank • with spring for std unit • with spring for unit with tank	OPT	OPT	OPT	OPT
Electric board thermostat kit	SPEC	SPEC	SPEC	SPEC
Start up “Soft start” for compressors	SPEC	SPEC	SPEC	SPEC
Fan and/or pump timing	SPEC	SPEC	SPEC	SPEC
Special electric power supply	SPEC	SPEC	SPEC	SPEC
Low noise kit for pump	N.A.	SPEC	N.A.	SPEC
Grille kit for anti–intrusion protection	SPEC	SPEC	SPEC	SPEC

STD = Standard supply; OPT = supplied as accessory included in the price list; SPEC = Supplied as a special accessories;
N.A. = not available.

2 – Technical data

2.1 – Technical data: Superchiller SBH

R407C

MODEL		SBH057	SBH067	SBH077	SBH087	SBH107	SBH117	SBH157	SBH177
POWER SUPPLY	V/ph/Hz	400/3/50							
PERFORMANCE (1)									
Cooling capacity	kW	46,4	53,4	67,2	82,1	95,6	106,6	140,8	164,1
Total power input	kW	17,0	20,3	25,7	30,8	34,1	40,5	52,1	59,6
Compressors power input	kW	15,07	18,33	23,78	27,88	31,19	37,56	48,23	54,73
Fans power input	kW	1,96	1,96	1,96	2,94	2,94	2,94	3,92	4,90
EER	–	2,72	2,63	2,61	2,66	2,80	2,63	2,70	2,75
Freecooling capacity (2)	kW	32,9	34,2	39,4	51,0	56,7	58,6	77,6	91,2
EER at Z.E.T.	–	23,66	27,26	34,31	27,93	32,51	36,25	35,92	33,49
Water/glycol mixture flow	m^3/h	8,708	10,032	12,626	15,419	17,950	20,013	26,438	30,818
Water/glycol mixture pressure drop	kPa	72	94	85	109	89	109	91	98
Air flow rate	m^3/h	21.000	21.000	20.400	31.500	30.600	30.600	40.800	51.000
Refrigerant charge for each circuit	kg	8	8	10	10	15	15	18	21
Sound pressure level (3)	dB(A)	69	69	70	72	71	71	73	74
Sound pressure level (4)	dB(A)	57	57	58	60	59	59	62	63
REFRIGERANT CIRCUIT									
No.		2							
COMPRESSORS									
No.		2				4			
Type		hermetic scroll							
Nominal power (each)	HP	9	10	13	15	9	10	13	15
Standard step control		50/100				25/50/75/100			
FANS									
No.		2	2	2	3	3	3	4	5
Type		axial							
Wheel nominal diameter	mm	710							
Rpm	1/min	900							
Nominal power	kW	0,98							
EVAPORATOR									
Type		plate							
No.		1							
Refrigerant side internal volume	l	2,6	2,6	3,8	3,8	5,2	5,2	8,0	8,0
CONDENSING COIL									
Material tubes/fins		copper/aluminium							
Face area	m^2	2,8	2,8	2,8	4,1	4,1	4,1	5,4	6,8
Internal volume	l	11,2	11,2	16,5	16,5	24,3	24,3	31,9	39,8
FREECOOLING COIL									
Material tubes/fins		copper/aluminium							
Face area	m^2	2,8	2,8	2,8	4,1	4,1	4,1	5,4	6,8
WATER CONNECTIONS									
Diameters	inch	2 ”	2 ”	2 ”	2 ”	2 ”	2 ”	2 1/2 ”	2 1/2 ”
Unit volume	l	37,1	37,1	50,0	50,0	68,4	68,4	93,5	109,3
ELECTRICAL CHARACTERISTICS									
OA	A	32	37	48	55	63	74	97	107
FLA	A	37	42	54	62	73	83	107	122
LRA (unit inrush current)	A	150	153	204	209	186	193	257	269
Compressor nominal current	A	28	34	44	50	58	69	90	98
Fan nominal current	A	1,75							
DIMENSIONS									
Length	mm	2200	2200	2200	2990	2990	2990	3780	4570
Depth	mm	1100	1100	1100	1100	1100	1100	1100	1100
Height	mm	2045	2045	2045	2045	2045	2045	2045	2045
WEIGHTS									
Net weight	kg	840	840	920	1090	1330	1330	1670	1930
Working weight	kg	877	877	970	1140	1398	1398	1764	2039

(1) Outdoor temperature 35 °C, mixture temperature 15/10 °C, water/glycol mixture 70/30 %
(2) Outdoor temperature 5 °C, mixture inlet temperature 15 °C, nominal mixture flow
(3) SPL measured with outdoor temperature 35 °C, free field conditions, 1 m from unit, according ISO 3744
(4) SPL measured with outdoor temperature 35 °C, free field conditions, 5 m from unit, 1 m above ground level

2.2 – Technical data: Superchiller SBH

R22

MODEL		SBH052	SBH062	SBH072	SBH082	SBH102	SBH112	SBH152	SBH172
POWER SUPPLY	V/ph/Hz	400/3/50							
PERFORMANCE (1)									
Cooling capacity	kW	48,3	55,7	70,0	85,5	99,6	111,0	146,7	171,0
Total power input	kW	17,4	20,8	26,3	31,5	34,9	41,5	53,4	61,0
Compressors power input	kW	15,46	18,80	24,39	28,59	31,99	38,52	49,47	56,13
Fans power input	kW	1,96	1,96	1,96	2,94	2,94	2,94	3,92	4,90
EER	–	2,77	2,68	2,66	2,71	2,85	2,68	2,75	2,80
Freecooling capacity (2)	kW	33,4	34,8	40,0	51,8	57,6	59,5	78,8	92,6
EER at Z.E.T.	–	24,65	28,39	35,73	29,09	33,87	37,76	37,41	34,89
Water/glycol mixture flow	m^3/h	9,071	10,450	13,152	16,061	18,698	20,847	27,540	32,102
Water/glycol mixture pressure drop	kPa	78	101	92	117	96	117	98	105
Air flow rate	m^3/h	21.000	21.000	20.400	31.500	30.600	30.600	40.800	51.000
Refrigerant charge for each circuit	kg	8	8	10	10	15	15	18	21
Sound pressure level (3)	dB(A)	69	69	70	72	71	71	73	74
Sound pressure level (4)	dB(A)	57	57	58	60	59	59	62	63
REFRIGERANT CIRCUIT									
No.		2							
COMPRESSORS									
No.		2				4			
Type		hermetic scroll							
Nominal power (each)	HP	9	10	13	15	9	10	13	15
Standard step control		50/100				25/50/75/100			
FANS									
No.		2	2	2	3	3	3	4	5
Type		axial							
Wheel nominal diameter	mm	710							
Rpm	1/min	900							
Nominal power	kW	0,98							
EVAPORATOR									
Type		plate							
No.		1							
Refrigerant side internal volume	l	2,6	2,6	3,8	3,8	5,2	5,2	8,0	8,0
CONDENSING COIL									
Material tubes/fins		copper/aluminium							
Face area	m^2	2,8	2,8	2,8	4,1	4,1	4,1	5,4	6,8
Internal volume	l	11,2	11,2	16,5	16,5	24,3	24,3	31,9	39,8
FREECOOLING COIL									
Material tubes/fins		copper/aluminium							
Face area	m^2	2,8	2,8	2,8	4,1	4,1	4,1	5,4	6,8
WATER CONNECTIONS									
Diameters	inch	2 ”	2 ”	2 ”	2 ”	2 ”	2 ”	2 1/2 ”	2 1/2 ”
Unit volume	l	37,1	37,1	50,0	50,0	68,4	68,4	93,5	109,3
ELECTRICAL CHARACTERISTICS									
OA	A	32	38	48	56	64	75	98	109
FLA	A	37	42	54	62	73	83	107	122
LRA (unit inrush current)	A	150	153	204	209	186	193	257	269
Compressor nominal current	A	29	34	45	51	59	70	91	100
Fan nominal current	A	1,75							
DIMENSIONS									
Length	mm	2200	2200	2200	2990	2990	2990	3780	4570
Depth	mm	1100	1100	1100	1100	1100	1100	1100	1100
Height	mm	2045	2045	2045	2045	2045	2045	2045	2045
WEIGHTS									
Net weight	kg	840	840	920	1090	1330	1330	1670	1930
Working weight	kg	877	877	970	1140	1398	1398	1764	2039

(1) Outdoor temperature 35 °C, mixture temperature 15/10 °C, water/glycol mixture 70/30 %

(2) Outdoor temperature 5 °C, mixture inlet temperature 15 °C, nominal mixture flow

(3) SPL measured with outdoor temperature 35 °C, free field conditions, 1 m from unit, according ISO 3744

(4) SPL measured with outdoor temperature 35 °C, free field conditions, 5 m from unit, 1 m above ground level

2.3 – Technical data: Superchiller SLH

R407C

MODEL		SLH057	SLH067	SLH077	SLH087	SLH107	SLH117	SLH157	SLH177
POWER SUPPLY	V/ph/Hz	400/3/50							
PERFORMANCE (1)									
Cooling capacity	kW	45,3	53,3	68,2	82,3	96,7	107,8	141,6	161,5
Total power input	kW	17,3	19,8	25,4	29,7	33,3	39,4	51,1	61,4
Compressors power input	kW	15,89	18,41	23,27	27,58	30,53	36,59	47,56	56,53
Fans power input	kW	1,40	1,40	2,10	2,10	2,80	2,80	3,50	4,90
EER	–	2,62	2,69	2,69	2,77	2,90	2,74	2,77	2,63
Freecooling capacity (2)	kW	28,9	31,2	43,1	46,6	59,2	61,5	74,7	90.5
EER at Z.E.T.	–	32,35	38,09	32,49	39,20	34,55	38,51	40,46	32,97
Water/glycol mixture flow	m^3/h	8,504	10,012	12,811	15,458	18,164	20,247	26,594	30,332
Water/glycol mixture pressure drop	kPa	71	65	84	85	79	94	74	96
Air flow rate	m^3/h	16.200	15.600	24.300	23.400	31.200	31.200	39.000	43.000
Refrigerant charge for each circuit	kg	8	10	10	13	17	17	21	21
Sound pressure level (3)	dB(A)	62	62	64	64	64	64	66	69
Sound pressure level (4)	dB(A)	50	50	52	52	53	53	55	58
REFRIGERANT CIRCUIT									
No.		2							
COMPRESSORS									
No.		2				4			
Type		hermetic scroll							
Nominal power (each)	HP	9	10	13	15	9	10	13	15
Standard step control		50/100				25/50/75/100			
FANS									
No.		2	2	3	3	4	4	5	5
Type		axial							
Wheel nominal diameter	mm	710							
Rpm	1/min	680							800
Nominal power	kW	0,70							0,98
EVAPORATOR									
Type		plate							
No.		1							
Refrigerant side internal volume	l	2,6	2,6	3,8	3,8	5,2	5,2	8,0	8,0
CONDENSING COIL									
Material tubes/fins		copper/aluminium							
Face area	m^2	2,8	2,8	4,1	4,1	5,4	5,4	6,8	6,8
Internal volume	l	11,2	16,5	16,5	24,3	31,9	31,9	39,8	39,8
FREECOOLING COIL									
Material tubes/fins		copper/aluminium							
Face area	m^2	2,8	2,8	4,1	4,1	5,4	5,4	6,8	6,8
WATER CONNECTIONS									
Diameters	inch	2 ”	2 ”	2 ”	2 ”	2 ”	2 ”	2 1/2 ”	2 1/2 ”
Unit volume	l	37,1	47,7	50,0	65,6	83,6	83,6	109,3	109,3
ELECTRICAL CHARACTERISTICS									
OA	A	31	36	47	53	62	72	95	109
FLA	A	36	41	53	60	72	82	106	122
LRA (unit inrush current)	A	149	152	203	207	185	193	256	269
Compressor nominal current	A	29	34	43	49	57	67	89	101
Fan nominal current	A	1,15							1,75
DIMENSIONS									
Length	mm	2200	2200	2990	2990	3780	3780	4570	4570
Depth	mm	1100	1100	1100	1100	1100	1100	1100	1100
Height	mm	2045	2045	2045	2045	2045	2045	2045	2045
WEIGHTS									
Net weight	kg	860	900	1090	1170	1570	1570	1920	1970
Working weight	kg	897	948	1140	1236	1654	1654	2029	2079

(1) Outdoor temperature 35 °C, mixture temperature 15/10 °C, water/glycol mixture 70/30 %

(2) Outdoor temperature 5 °C, mixture inlet temperature 15 °C, nominal mixture flow

(3) SPL measured with outdoor temperature 35 °C, free field conditions, 1 m from unit, according ISO 3744

(4) SPL measured with outdoor temperature 35 °C, free field conditions, 5 m from unit, 1 m above ground level

2.4 – Technical data: Superchiller SLH

R22

MODEL		SLH052	SLH062	SLH072	SLH082	SLH102	SLH112	SLH152	SLH172
POWER SUPPLY	V/ph/Hz	400/3/50							
PERFORMANCE (1)									
Cooling capacity	kW	47,2	55,5	71,1	85,8	100,8	112,3	147,5	168,3
Total power input	kW	17,7	20,3	26,0	30,4	34,1	40,3	52,3	62,9
Compressors power input	kW	16,30	18,88	23,86	28,29	31,31	37,53	48,78	57,98
Fans power input	kW	1,40	1,40	2,10	2,10	2,80	2,80	3,50	4,90
EER	–	2,67	2,74	2,74	2,82	2,95	2,79	2,82	2,68
Freecooling capacity (2)	kW	29,4	31,7	43,8	47,3	60,1	62,5	75,8	92.0
EER at Z.E.T.	–	33,70	39,67	33,84	40,83	35,99	40,11	42,15	34,34
Water/glycol mixture flow	m^3/h	8,858	10,430	13,345	16,102	18,921	21,091	27,702	31,595
Water/glycol mixture pressure drop	kPa	76	69	90	92	84	101	79	103
Air flow rate	m^3/h	16.200	15.600	24.300	23.400	31.200	31.200	39.000	43.000
Refrigerant charge for each circuit	kg	8	10	10	13	17	17	21	21
Sound pressure level (3)	dB(A)	62	62	64	64	64	64	66	69
Sound pressure level (4)	dB(A)	50	50	52	52	53	53	55	58
REFRIGERANT CIRCUIT									
No.		2							
COMPRESSORS									
No.		2				4			
Type		hermetic scroll							
Nominal power (each)	HP	9	10	13	15	9	10	13	15
Standard step control		50/100				25/50/75/100			
FANS									
No.		2	2	3	3	4	4	5	5
Type		axial							
Wheel nominal diameter	mm	710							
Rpm	1/min	680							800
Nominal power	kW	0,70							0,98
EVAPORATOR									
Type		plate							
No.		1							
Refrigerant side internal volume	l	2,6	2,6	3,8	3,8	5,2	5,2	8,0	8,0
CONDENSING COIL									
Material tubes/fins		copper/aluminium							
Face area	m^2	2,8	2,8	4,1	4,1	5,4	5,4	6,8	6,8
Internal volume	l	11,2	16,5	16,5	24,3	31,9	31,9	39,8	39,8
FREECOOLING COIL									
Material tubes/fins		copper/aluminium							
Face area	m^2	2,8	2,8	4,1	4,1	5,4	5,4	6,8	6,8
WATER CONNECTIONS									
Diameters	inch	2 ”	2 ”	2 ”	2 ”	2 ”	2 ”	2 1/2 ”	2 1/2 ”
Unit volume	l	37,1	47,7	50,0	65,6	83,6	83,6	109,3	109,3
ELECTRICAL CHARACTERISTICS									
OA	A	32	37	48	54	63	73	96	111
FLA	A	36	41	53	60	72	82	106	122
LRA (unit inrush current)	A	149	152	203	207	185	193	256	269
Compressor nominal current	A	30	34	44	50	58	68	90	102
Fan nominal current	A	1,15							1,75
DIMENSIONS									
Length	mm	2200	2200	2990	2990	3780	3780	4570	4570
Depth	mm	1100	1100	1100	1100	1100	1100	1100	1100
Height	mm	2045	2045	2045	2045	2045	2045	2045	2045
WEIGHTS									
Net weight	kg	860	900	1090	1170	1570	1570	1920	1970
Working weight	kg	897	948	1140	1236	1654	1654	2029	2079

(1) Outdoor temperature 35 °C, mixture temperature 15/10 °C, water/glycol mixture 70/30 %

(2) Outdoor temperature 5 °C, mixture inlet temperature 15 °C, nominal mixture flow

(3) SPL measured with outdoor temperature 35 °C, free field conditions, 1 m from unit, according ISO 3744

(4) SPL measured with outdoor temperature 35 °C, free field conditions, 5 m from unit, 1 m above ground level

2.5 – Technical data: Superchiller SBR

R407C

MODEL		SBR217	SBR257	SBR307	SBR347	SBR437	SBR507	SBR607	SBR687	SBR757
POWER SUPPLY	V/ph/Hz	400/3/50								
PERFORMANCE (1)										
Cooling capacity	kW	194,6	229,1	292,1	325,5	388,1	456,9	558,9	648,4	693,8
Total power input	kW	78,9	93,4	111,6	135,5	159,8	188,8	223,3	277,5	276,4
Compressors power input	kW	70,5	85,00	98,98	122,9	143	172,02	202,32	252,28	251,19
Fans power input	kW	8,40	8,40	12,60	12,60	16,80	16,80	21,00	25,20	25,20
EER	–	2,46	2,45	2,62	2,4	2,43	2,42	2,50	2,34	2,51
Freecooling capacity (2)	kW	133,0	138,7	212,6	218,0	265,2	276,5	358,1	437,2	444,8
EER at Z.E.T.	–	24,35	27,28	23,18	25,34	24,29	27,20	26,61	25,73	27,53
Water/glycol mixture flow	m^3/h	37,04	43,023	54,848	61,98	73,82	85,798	104,943	121,750	130,278
H_2O/glycol mixture pres. drop	kPa	91	124	126	152	95	104	142	171	199
Air flow rate	m^3/h	72.000	72.000	108.000	108.000	144.000	144.000	180.000	216.000	216.000
Refrig. charge for each circuit	kg	26	27	34	35	45	50	60	75	80
Sound pressure level (3)	dB(A)	77	77	78	79	80	80	81	82	81
Sound pressure level (4)	dB(A)	66	66	67	68	70	70	71	72	71
REFRIGERANT CIRCUIT										
No.		2								
COMPRESSORS										
No.		2				4				2
Type		reciprocating semihermetic								
Nominal power (each)	HP	40	50	60	75	40	50	60	75	160
Standard step control		33/50/83/100	37/50/87/100	37/50/87/100	37/50/87/100	25/50/75/100	25/50/75/100	25/50/75/100	25/50/75/100	37/50/87/100
FANS										
No.		4	4	6	6	8	8	10	12	12
Type		axial								
Wheel nominal diameter	mm	800								
Rpm	1/min	870								
Nominal power	kW	2,10								
EVAPORATOR										
Type		tube in shell								
No.		1								
Refrig. side internal volume	l	24,8	27,1	36,1	39,4	54,2	57,5	68,6	83,8	83,8
CONDENSING COIL										
Material tubes/fins		copper/aluminium								
Face area	m^2	9,5	9,5	14,3	14,3	19,0	19,0	23,8	28,5	28,5
Internal volume	l	57,0	57,0	83,4	83,4	111,3	111,3	138,5	165,0	165,0
FREECOOLING COIL										
Material tubes/fins		copper/aluminium								
Face area	m^2	9,5	9,5	14,3	14,3	19,0	19,0	23,8	28,5	28,5
WATER CONNECTIONS										
Diameters	inch	victaulic 3 ”		victaulic 4 ”			victaulic 5 ”			
Unit volume	l	191,2	196,6	281,7	288,6	372,5	415,6	500,0	585,1	585,1
ELECTRICAL CHARACTERISTICS										
OA	A	131,5	176	211	250	266	355	420	504	483
FLA	A	160	200	248	284	320	400	488	640	540
LRA (unit inrush current)	A	349	441	544	604	596	752	920	1120	1090
Compressor nominal current	A	116	160	187	226	234	323	380	456	435
Fan nominal current	A	4,0								
DIMENSIONS										
Length	mm	3020	3020	4120	4120	5220	5220	6320	7420	7420
Depth	mm	2260	2260	2260	2260	2260	2260	2260	2260	2260
Height	mm	2370	2370	2370	2370	2370	2370	2370	2370	2370
WEIGHTS										
Net weight	kg	2560	2810	3510	3500	4660	5100	5810	6550	6680
Working weight	kg	2751	3007	3792	3789	5033	5516	6310	7135	7265

(1) Outdoor temperature 35 °C, mixture temperature 15/10 °C, water/glycol mixture 70/30 %
(2) Outdoor temperature 5 °C, mixture inlet temperature 15 °C, nominal mixture flow
(3) SPL measured with outdoor temperature 35 °C, free field conditions, 1 m from unit, according ISO 3744
(4) SPL measured with outdoor temperature 35 °C, free field conditions, 5 m from unit, 1 m above ground level

2.6 – Technical data: Superchiller SBR

R22

MODEL		SBR212	SBR252	SBR302	SBR342	SBR432	SBR502	SBR602	SBR682	SBR752
POWER SUPPLY	V/ph/Hz	400/3/50								
PERFORMANCE (1)										
Cooling capacity	kW	200,3	242,5	309,1	336,9	395,9	483,5	591,4	686,1	734,2
Total power input	kW	80,12	96,0	114,6	136,7	161,1	194,1	229,6	285,3	284,2
Compressors power input	kW	71,7	87,63	102,04	124,1	144,3	177,34	208,58	260,08	258,96
Fans power input	kW	8,40	8,40	12,60	12,60	16,80	16,80	21,00	25,20	25,20
EER	–	2,50	2,52	2,70	2,46	2,46	2,49	2,58	2,41	2,58
Freecooling capacity (2)	kW	135,0	140,8	215,8	221,3	269,2	280,8	363,5	443,9	451,5
EER at Z.E.T.	–	25,77	28,86	24,53	26,82	25,70	28,78	28,16	27,23	29,13
Water/glycol mixture flow	m^3/h	38,142	45,527	58,040	64,160	75,388	90,791	111,050	128,836	137,860
H_2O/glycol mixture pres. drop	kPa	96	137	140	162	98	116	158	191	221
Air flow rate	m^3/h	72.000	72.000	108.000	108.000	144.000	144.000	180.000	216.000	216.000
Refrigerant charge for each circuit	kg	26	27	34	35	45	50	60	75	80
Sound pressure level (3)	dB(A)	77	77	78	79	80	80	81	82	81
Sound pressure level (4)	dB(A)	66	66	67	68	70	70	71	72	71
REFRIGERANT CIRCUIT										
No.		2								
COMPRESSORS										
No.		2				4				2
Type		reciprocating semihermetic								
Nominal power (each)	HP	40	50	60	75	40	50	60	75	160
Standard step control		33/50/83/100	37/50/87/100	37/50/87/100	37/50/87/100	25/50/75/100	25/50/75/100	25/50/75/100	25/50/75/100	37/50/87/100
FANS										
No.		4	4	6	6	8	8	10	12	12
Type		axial								
Wheel nominal diameter	mm	800								
Rpm	1/min	870								
Nominal power	kW	2,10								
EVAPORATOR										
Type		tube in shell								
No.		1								
Refrigerant side internal volume	l	24,8	27,1	36,1	39,4	54,2	57,5	68,6	83,8	83,8
CONDENSING COIL										
Material tubes/fins		copper/aluminium								
Face area	m^2	9,5	9,5	14,3	14,3	19,0	19,0	23,8	28,5	28,5
Internal volume	l	57,0	57,0	83,4	83,4	111,3	111,3	138,5	165,0	165,0
FREECOOLING COIL										
Material tubes/fins		copper/aluminium								
Face area	m^2	9,5	9,5	14,3	14,3	19,0	19,0	23,8	28,5	28,5
WATER CONNECTIONS										
Diameters	inch	victaulic 3 ”		victaulic 4 ”			victaulic 5 ”			
Unit volume	l	191,2	196,6	281,7	288,6	372,5	415,6	500,0	585,1	585,1
ELECTRICAL CHARACTERISTICS										
OA	A	134	180	216	253	268	363	430	516	494
FLA	A	160	200	248	284	320	400	488	640	540
LRA (unit inrush current)	A	349	441	544	604	596	752	920	1120	1090
Compressor nominal current	A	118	164	192	229	236	331	390	468	446
Fan nominal current	A	4,0								
DIMENSIONS										
Length	mm	3020	3020	4120	4120	5220	5220	6320	7420	7420
Depth	mm	2260	2260	2260	2260	2260	2260	2260	2260	2260
Height	mm	2370	2370	2370	2370	2370	2370	2370	2370	2370
WEIGHTS										
Net weight	kg	2560	2810	3510	3500	4660	5100	5810	6550	6680
Working weight	kg	2751	3007	3792	3789	5033	5516	6310	7135	7265

(1) Outdoor temperature 35 °C, mixture temperature 15/10 °C, water/glycol mixture 70/30 %

(2) Outdoor temperature 5 °C, mixture inlet temperature 15 °C, nominal mixture flow

(3) SPL measured with outdoor temperature 35 °C, free field conditions, 1 m from unit, according ISO 3744

(4) SPL measured with outdoor temperature 35 °C, free field conditions, 5 m from unit, 1 m above ground level

2.7 – Technical data: Superchiller SLR

R407C

MODEL		SLR217	SLR257	SLR307	SLR347	SLR437	SLR507	SLR607	SLR687
POWER SUPPLY	V/ph/Hz	400/3/50							
PERFORMANCE (1)									
Cooling capacity	kW	188,5	239,8	285,9	333,6	372,5	468,5	564,1	632,7
Total power input	kW	77,6	89,1	109,4	132,1	155,9	180,8	216,8	277,6
Compressors power input	kW	72,2	81,03	101,26	121,3	145,1	167,34	200,63	261,36
Fans power input	kW	5,40	8,10	8,10	10,80	10,80	13,50	16,20	16,20
EER	–	2,43	2,69	2,61	2,52	2,39	2,59	2,60	2,28
Freecooling capacity (2)	kW	119,6	180,8	190,4	218,5	238,1	306,3	379,0	390,1
EER at Z.E.T.	–	36,95	29,61	35,29	30,15	36,75	34,70	34,82	39,05
Water/glycol mixture flow	m^3/h	35,9	45,036	53,679	63,53	70,83	87,963	105,920	118,798
Water/glycol mixture pressure drop	kPa	86	141	122	101	89	113	150	166
Air flow rate	m^3/h	58.800	88.200	88.200	117.600	117.600	147.000	176.400	176.400
Refrigerant charge for each circuit	kg	26	32	34	42	45	53	75	75
Sound pressure level (3)	dB(A)	69	70	70	71	71	71	72	73
Sound pressure level (4)	dB(A)	58	59	59	61	61	61	62	63
REFRIGERANT CIRCUIT									
No.		2							
COMPRESSORS									
No.		2				4			
Type		reciprocating semihermetic							
Nominal power (each)	HP	40	50	60	75	40	50	60	75
Standard step control		33/50/83/100	37/50/87/100	37/50/87/100	37/50/87/100	25/50/75/100	25/50/75/100	25/50/75/100	25/50/75/100
FANS									
No.		4	6	6	8	8	10	12	12
Type		axial							
Wheel nominal diameter	mm	800							
Rpm	1/min	680							
Nominal power	kW	1,35							
EVAPORATOR									
Type		tube in shell							
No.		1							
Refrigerant side internal volume	l	24,8	27,1	36,1	39,4	54,2	57,5	68,6	83,8
CONDENSING COIL									
Material tubes/fins		copper/aluminium							
Face area	m^2	9,5	14,3	14,3	19,0	19,0	23,8	28,5	28,5
Internal volume	l	57,0	83,4	83,4	111,3	111,3	138,5	165,0	165,0
FREECOOLING COIL									
Material tubes/fins		copper/aluminium							
Face area	m^2	9,5	14,3	14,3	19,0	19,0	23,8	28,5	28,5
WATER CONNECTIONS									
Diameters	inch	victaulic 3 ”		victaulic 4 ”			victaulic 5 ”		
Unit volume	l	191,2	256,4	281,7	351,4	372,5	470,0	553,0	585,1
ELECTRICAL CHARACTERISTICS									
OA	A	127	168	204	243	255	339	405	497
FLA	A	153	198	238	278	306	391	476	620
LRA (unit inrush current)	A	342	439	534	598	582	743	908	1100
Compressor nominal current	A	118	154	190	224	237	316	378	469
Fan nominal current	A	2,3							
DIMENSIONS									
Length	mm	3020	4120	4120	5220	5220	6320	7420	7420
Depth	mm	2260	2260	2260	2260	2260	2260	2260	2260
Height	mm	2370	2370	2370	2370	2370	2370	2370	2370
WEIGHTS									
Net weight	kg	2600	3430	3550	4110	4720	5760	6440	6620
Working weight	kg	2791	3686	3832	4461	5093	6230	6993	7205

(1) Outdoor temperature 35 °C, mixture temperature 15/10 °C, water/glycol mixture 70/30 %
(2) Outdoor temperature 5 °C, mixture inlet temperature 15 °C, nominal mixture flow
(3) SPL measured with outdoor temperature 35 °C, free field conditions, 1 m from unit, according ISO 3744
(4) SPL measured with outdoor temperature 35 °C, free field conditions, 5 m from unit, 1 m above ground level

2.8 – Technical data: Superchiller SLR

R22

MODEL		SLR212	SLR252	SLR302	SLR342	SLR432	SLR502	SLR602	SLR682
POWER SUPPLY	V/ph/Hz	400/3/50							
PERFORMANCE (1)									
Cooling capacity	kW	194,2	253,8	302,5	343,8	385,7	495,7	596,9	669,5
Total power input	kW	78,4	91,6	112,5	133	157,9	186,0	223,0	285,6
Compressors power input	kW	73	83,53	104,40	122,2	147,1	172,52	206,84	269,44
Fans power input	kW	5,40	8,10	8,10	10,80	10,80	13,50	16,20	16,20
EER	–	2,48	2,77	2,69	2,58	2,44	2,66	2,68	2,34
Freecooling capacity (2)	kW	121,4	183,6	193,3	221,9	241,8	311,0	384,8	396,0
EER at Z.E.T.	–	39,10	31,33	37,35	31,91	38,89	36,72	36,85	41,33
Water/glycol mixture flow	m^3/h	36,99	47,657	56,803	65,47	73,46	93,083	112,085	125,712
Water/glycol mixture pressure drop	kPa	91	157	135	107	95	126	167	185
Air flow rate	m^3/h	58.800	88.200	88.200	117.600	117.600	147.000	176.400	176.400
Refrigerant charge for each circuit	kg	26	32	34	42	45	53	75	75
Sound pressure level (3)	dB(A)	69	70	70	71	71	71	72	73
Sound pressure level (4)	dB(A)	58	59	59	61	61	61	62	63
REFRIGERANT CIRCUIT									
No.		2							
COMPRESSORS									
No.		2				4			
Type		reciprocating semihermetic							
Nominal power (each)	HP	40	50	60	75	40	50	60	75
Standard step control		33/50/83/100	37/50/87/100	37/50/87/100	37/50/87/100	25/50/75/100	25/50/75/100	25/50/75/100	25/50/75/100
FANS									
No.		4	6	6	8	8	10	12	12
Type		axial							
Wheel nominal diameter	mm	800							
Rpm	1/min	680							
Nominal power	kW	1,35							
EVAPORATOR									
Type		tube in shell							
No.		1							
Refrigerant side internal volume	l	24,8	27,1	36,1	39,4	54,2	57,5	68,6	83,8
CONDENSING COIL									
Material tubes/fins		copper/aluminium							
Face area	m^2	9,5	14,3	14,3	19,0	19,0	23,8	28,5	28,5
Internal volume	l	57,0	83,4	83,4	111,3	111,3	138,5	165,0	165,0
FREECOOLING COIL									
Material tubes/fins		copper/aluminium							
Face area	m^2	9,5	14,3	14,3	19,0	19,0	23,8	28,5	28,5
WATER CONNECTIONS									
Diameters	inch	victaulic 3 ”		victaulic 4 ”			victaulic 5 ”		
Unit volume	l	191,2	256,4	281,7	351,4	372,5	470,0	553,0	585,1
ELECTRICAL CHARACTERISTICS									
OA	A	129	172	209	245	259	347	415	509
FLA	A	153	198	238	278	306	391	476	620
LRA (unit inrush current)	A	342	439	534	599	582	743	908	1100
Compressor nominal current	A	119	158	195	226	240	324	387	482
Fan nominal current	A	2,3							
DIMENSIONS									
Length	mm	3020	4120	4120	5220	5220	6320	7420	7420
Depth	mm	2260	2260	2260	2260	2260	2260	2260	2260
Height	mm	2370	2370	2370	2370	2370	2370	2370	2370
WEIGHTS									
Net weight	kg	2600	3430	3550	4110	4720	5760	6440	6620
Working weight	kg	2791	3686	3832	4461	5093	6230	6993	7205

(1) Outdoor temperature 35 °C, mixture temperature 15/10 °C, water/glycol mixture 70/30 %

(2) Outdoor temperature 5 °C, mixture inlet temperature 15 °C, nominal mixture flow

(3) SPL measured with outdoor temperature 35 °C, free field conditions, 1 m from unit, according ISO 3744

(4) SPL measured with outdoor temperature 35 °C, free field conditions, 5 m from unit, 1 m above ground level

3 – Sound Pressure Levels

The following tables indicate the noise levels with relevant values for every octave band frequency, measured with outdoor temperature 35°C, free field conditions, 1 m from unit according to ISO 3744.

3.1 – Models SBH

MODELS	OCTAVE BAND FREQUENCY (Hz)									SOUND LEVEL [dB(A)]
	31	63	125	250	500	1000	2000	4000	8000	
SBH05	60	73	75	70	66	64	59	52	43	69
SBH06	60	73	75	70	66	64	59	52	43	69
SBH07	61	74	77	71	67	65	59	53	43	70
SBH08	62	75	79	74	69	67	60	54	45	72
SBH10	62	75	78	73	68	66	59	53	45	71
SBH11	62	75	78	73	68	66	59	53	45	71
SBH15	63	76	81	73	71	67	63	55	48	73
SBH17	63	77	83	74	71	68	64	58	48	74

3.2 – Models SLH

MODELS	OCTAVE BAND FREQUENCY (Hz)									SOUND LEVEL [dB(A)]
	31	63	125	250	500	1000	2000	4000	8000	
SLH05	57	68	64	63	60	57	52	45	35	62
SLH06	57	68	64	63	60	57	52	45	35	62
SLH07	58	70	66	65	62	59	54	47	39	64
SLH08	58	72	67	65	62	59	53	47	40	64
SLH10	57	72	68	64	63	58	54	47	40	64
SLH11	57	72	68	64	63	58	54	47	40	64
SLH15	60	75	72	67	64	60	56	50	41	66
SLH17	62	75	75	70	66	64	59	52	42	69

3.3 – Models SBR

MODELS	OCTAVE BAND FREQUENCY (Hz)									SOUND LEVEL [dB(A)]
	31	63	125	250	500	1000	2000	4000	8000	
SBR21	68	77	83	78	73	72	67	65	56	77
SBR25	68	77	83	78	73	72	67	65	56	77
SBR30	68	76	79	78	75	74	67	66	56	78
SBR34	69	76	79	79	76	75	69	66	56	79
SBR43	70	76	79	81	77	76	70	65	55	80
SBR50	69	77	80	81	77	76	69	66	55	80
SBR60	71	77	81	82	78	77	70	67	56	81
SBR68	73	79	81	83	79	78	72	67	57	82
SBR75	72	78	80	83	78	77	69	66	55	81

3.4 – Models SLR

MODELS	OCTAVE BAND FREQUENCY (Hz)									SOUND LEVEL [dB(A)]
	31	63	125	250	500	1000	2000	4000	8000	
SLR21	69	73	73	72	64	62	62	54	45	69
SLR25	70	73	74	73	66	65	60	53	44	70
SLR30	68	73	71	71	67	66	60	53	45	70
SLR34	68	73	74	73	68	66	61	55	45	71
SLR43	69	74	74	72	69	66	61	54	45	71
SLR50	70	73	71	73	68	67	60	52	44	71
SLR60	70	74	72	73	69	68	62	53	46	72
SLR68	71	73	74	74	71	68	64	54	47	73

Note: The sound pressure levels for each octave band are expressed in dB with tolerances of (−0/+2) dB.

4 – Accessories technical data

4.1 – Buffer tank

It enables the inertial stabilizer function, for a better compressor operation, summed up in the following two points:

- it reduces the frequency of the compressor start up and consequent high current peaks, which is higher when the system thermal inertia is lower: MTBF value of the compressors increases so as so the unit reliability.
- it naturally eliminates the operation troubles caused in the Superchiller by sudden load variations (shown by variations of the chilled water temperature).

The buffer tank is supplied complete with pressure gauge, air purge valve, discharge valve, connection with the filling unit, connection for electric heaters; max operating pressure: 6 bar.

In the SBH – SLH versions the tank is in steel, with teflon surface coating; it is entirely coated with anti – condensate insulation, with outer finishing in imitation leather; in the SBR – SLR versions the tank is in carbon steel coated with anti – condensate insulation proper for outdoor installation (high resistence to ultraviolet rays).

MODELS	TANK VOLUME (l)	TANK NET WEIGHT (kg)	TANK WORKING WEIGHT (kg)
SBH – SLH 05	300	220	520
SBH – SLH 06	300	220	520
SBH – SLH 07	300	220	520
SBH – SLH 08	300	220	520
SBH – SLH 10	650	280	930
SBH – SLH 11	650	280	930
SBH – SLH 15	650	280	930
SBH – SLH 17	650	280	930
SBR – SLR 21	800	160	960
SBR – SLR 25	800	160	960
SBR – SLR 30	1100	200	1300
SBR – SLR 34	1100	200	1300
SBR – SLR 43	1100	200	1300
SBR – SLR 50	1100	200	1300
SBR – SLR 60	1500	250	1750
SBR – SLR 68	1500	250	1750
SBR 75	1500	250	1750

4.2 – Hydraulic kit.

Made up of an expansion tank (charged at 1.5 bar, max. operating pressure 4 bar) and a safety valve calibrated at 3.5 bar; their installation positions are indicated in the hydraulic scheme.

Expansion tank volumes:

- SBH – SLH: 8 l
- SBR – SLR: 12 l

It is recommended to check always the total capacity of the expansion tank depending on the unit volume, the user circuit volume, the glycol percentage in the mixture and the expected max. temperature variation in the mixture.

4.3 – Pump group

The pumps are close–coupled centrifugal type, electrical motor with extended shaft directly connected; the induction motor has 2 or 4 poles with IP 54 protection and class F insulation.
The materials used for the pump main components are:

- Pump casing in cast iron
- Impeller wheel in brass or cast iron, depending on the models
- Shaft in stainless steel AISI 303 or AISI 430 depending on the models
- Mechanical seal X7X72Z7 in ethylene–propylene, ceramic and impregnated graphite, suitable for the use of mixtures containing ethylene glycol.

The pump units have been chosen and sized to operate with special utilization limits, namely:

- water–ethylene glycol mixtures up to 65–35% in weight
- operating temperatures not lower than 4 °C.

The hydraulic circuit for the single pump versions includes on–off valves in suction and discharge; in case of versions with double pumps (one is stand–by) the hydraulic circuit includes, for each pump, on–off valves in suction and check valves in discharge.
In the electric board there are automatic magneto–thermal protections for each pump; if the second pump is installed, the microprocessor control manages the operating rotation between the two pumps and the possible start of the stand–by one if the primary pump stops.

Pump group NM with 2 poles and standard head; technical data referred to each pump

MODEL		05	06	07	08	10	11	15	17
Available pressure head – SBH (*)	(kPa)	91	60	48	74	73	101	63	82
Available pressure head – SLH (*)	(kPa)	94	92	48	98	82	116	81	88
Pump rotor model		32/12 AE rot. D	32/12 AE rot. D	32/12 AE rot. D	32/12 SE	32/12 SE	40/16 BE rot. C	40/16 BE rot. C	40/16 AE rot. B
Nominal motor power	kW	1.1	1.1	1.1	2.2	2.2	3	3	4
Noise level (**)	[dB(A)]	70	70	70	70	70	72	72	72
CosĂ at maximum load		0.8	0.8	0.8	0.8	0.8	0.9	0.9	0.86
FLA	(A)	2.9	2.9	2.9	5.3	5.3	6.6	6.6	9.6
LRA	(A)	15.7	15.7	15.7	24.9	24.9	51.5	51.5	56.6
Pump weight	(kg)	32	32	32	35	35	50	50	53

Pump group NM with 2 poles and high head; technical data referred to each pump

MODEL		05	06	07	08	10	11	15	17
Available pressure head – SBH (*)	(kPa)	147	117	118	129	137	164	134	110
Available pressure head – SLH (*)	(kPa)	150	149	118	153	146	179	152	114
Pump rotor model		32/12 SE	32/12 SE	32/12SE	40/16 BE rot.C	40/16 BE rot.C	40/16 AE rot. B	40/16 AE rot. B	50/16 BE rot. 153
Nominal motor power	kW	1.5	1.5	2.2	3	3	4	4	5.5
Noise level (**)	[dB(A)]	70	70	70	72	72	72	72	78
CosĂ at maximum load		0.8	0.8	0.8	0.9	0.9	0.86	0.86	0.84
FLA	(A)	4.3	4.3	5.3	6.6	6.6	9.6	9.6	12
LRA	(A)	22.4	22.4	24.9	51.5	51.5	56.6	56.6	72.0
Pump weight	(kg)	32	32	35	50	50	53	53	69

Pump group NM4 with 4 poles and standard head; technical data referred to each pump

MODEL		05	06	07	08	10	11	15	17
Available pressure head – SLH (*)	(kPa)	64	66	95	74	56	81	69	52
Pump rotor model		40/20 AE	40/20 AE	40/25 AE rot. B	40/25 AE rot. B	40/25 AE rot. B	50/25 AE rot. B	50/25 AE rot. B	65/25 AE
Nominal motor power	kW	1.1	1.1	3	3	3	4	4	5.5
Noise level (**)	[dB(A)]	54	54	64	64	64	64	64	69
CosĂ at maximum load		0.82	0.82	0.82	0.82	0.82	0.78	0.78	0.83
FLA	(A)	2.9	2.9	6.7	6.7	6.7	9.2	9.2	12.5
LRA	(A)	12.5	12.5	30.8	30.8	30.8	41.4	41.4	82.5
Pump weight	(kg)	41	41	79	79	79	86	86	119

Pump group NM with 2 poles and standard head; technical data referred to each pump

MODEL		21	25	30	34	43	50	60	68	75
Available pressure head – SBR (*)	(kPa)	102	104	78	80	97	83	89	109	61
Available pressure head – SLR (*)	(kPa)	108	92	88	88	106	68	76	121	–
Pump rotor model		50/12 AE	50/16 BE rot. 153	50/16 BE rot. 153	65/16CE rot. D 50/16 BE rot. 153	65/16CE rot. D	65/16CE rot. D	65/16AE rot. B	80/16AE rot. B	80/16AE rot. B
Nominal motor power	kW	4	5.5	5.5	9.2/5.5	9.2	9.2	15	18.5	18.5
Noise level (**)	[dB(A)]	72	78	78	82/78	82	82	82	82	82
CosÅ at maximum load		0.84	0.84	0.84	0.86/0.84	0.86	0.86	0.86	0.86	0.86
FLA	(A)	10	12	12	19/12	19	19	30	37	37
LRA	(A)	57	72	72	181/72	181	181	390	518	518
Pump weight	(kg)	57	69	69	107/69	107	107	130	150	150

Pump group NM with 2 poles and high head; technical data referred to each pump

MODEL		21	25	30	34	43	50	60	68	75
Available pressure head – SBR (*)	(kPa)	152	128	113	166	191	175	167	156	109
Available pressure head – SLR (*)	(kPa)	157	109	119	139	199	161	157	167	–
Pump rotor model		50/16 BE rot. 153	50/16 AE rot. B	65/16CE rot. D	65/16 AE rot. B 65/16CE rot. D	65/16 AE rot. B	65/16 AE rot. B	80/16 AE rot. B	80/16 AE	80/16 AE
Nominal motor power	kW	5.5	7.5	9.2	15/9.2	15	15	18.5	18.5	18.5
Noise level (**)	[dB(A)]	78	78	82	82	82	82	82	82	82
CosÅ at maximum load		0.84	0.84	0.86	0.86	0.86	0.86	0.86	0.86	0.86
FLA	(A)	12	16	19	30/19	30	30	37	37	37
LRA	(A)	72	149	181	390/181	390	390	518	518	518
Pump weight	(kg)	69	76	107	130/107	130	130	150	150	150

Pump group NM4 with 4 poles and standard head; technical data referred to each pump

MODEL		21	25	30	34	43	50	60	68	75
Available pressure head – SBR (*)	(kPa)	87	96	62	62	84	76	87	70	91
Available pressure head – SLR (*)	(kPa)	91	72	71	74	92	63	75	80	–
Pump rotor model		65/25 AE	65/31 BE rot. C	65/31 BE rot. C	80/25 AE 65/31 BE rot. C	80/25 AE	80/25 AE	80/315 B	100/315B	100/315A
Nominal motor power	kW	5.5	7.5	7.5	7.5	7.5	7.5	11	15	18.5
Noise level (**)	[dB(A)]	69	69	69	69	69	69	74	74	74
CosÅ at maximum load		0.83	0.84	0.84	0.84	0.84	0.84	0.88	0.9	0.9
FLA	(A)	13	16	16	16	16	16	23	30	37
LRA	(A)	83	107	107	107	107	107	170	210	266
Pump weight	(kg)	119	164	164	137/164	137	137	256	275	324

(*) With nominal mixture (water/glycol 70/30%) flow rates referred to the operating conditions with R22, 35 °C outdoor air, in/out mixture temperature 15/10 °C.

(**) According to the ISO 3744 norm.

4.4 – Partial heat recovery.

It enables to recover up to 20% of the heat discharged by the unit to the condenser. The system does not have any control and is made up of plate heat exchangers installed on each circuit before the condenser. The exchangers are protected by a suitable anti–frost heater that operates when the system is stopped. It is recommended to install a safety valve in the hydraulic circuit to avoid hazards due to overpressures, if there is no water flow in the recuperator.

The water temperature at the recuperator inlet (in stationary operating conditions) must range between 25 and 45 ºC, the thermal difference between 3.5 and 8 ºC.

Technical features of the partial recovery for the unit SBH--SLH

MODEL		05	06	07	08	10	11	15	17
Heating capacity	(kW)	12	14	18	21	24	28	36	42
Water flow	(l/s)	0.573	0.669	0.860	1.003	1.146	1.338	1.720	2.006
Pressure drop	(kPa)	7	9	13	18	8	10	15	20
Water connections		1 ¼ ”	1 ¼ ”	1 ¼ ”	1 ¼ ”	1 ½ ”	1 ½ ”	1 ½ ”	1 ½ ”

Technical features of the partial recovery for the unit SBR--SLR

MODEL		21	25	30	34	43	50	60	68	75
Heating capacity	(kW)	54	62	74	85	108	124	148	170	188
Water flow	(l/s)	2.580	2.962	3.536	4.061	5.160	5.924	7.072	8.122	8.982
Pressure drop	(kPa)	9	12	18	22	12	16	23	28	33
Water connections (double)		1 ¼ ”	1 ¼ ”	1 ¼ ”	1 ¼ ”	1 ½ ”	1 ½ ”	1 ½ ”	1 ½ ”	1 ½ ”

Rated operating conditions: outdoor air 35ºC, glycol mixture 30% in/out 15/10ºC

Recuperator conditions: water in/out 40/45 ºC

5 – Operating range and correction factors

5.1 – Working limits

Minimum temperature of the room air entering the finned coils (with standard operating unit) for all the models: –25 °C; for the maximum temperature see the following Tables.

For SBH –SLH units maximum flow rate allowed is the one correspondent to 3 °C thermal difference: higher value may cause too high pressure drop.

For SBR –SLR maximum flow rate are indicated in the following Tables: higher value may cause erosions and vibrations inside shell and tube exchanger.

For all units the minimum water flow rate allowed is the one presenting the maximum thermal difference of about 8 °C according with sufficient evaporating temperature values to prevent the action of safety devices which would stop the units.

Outlet water temperature from 4 to 15 °C.

The maximum allowed water return temperature when the unit is in full operation is 20 °C; return temperatures in excess of 20 °C are allowed only during start–up.

The maximum glycol percentage permitted is 50%; 35% with standard pump groups.

The minimum glycol percentage necessary is in relation with the minimum ambient air temperature conditions referred to the installation place (see following Tables).

Maximum hydraulic working pressure is 6 bar; with hydraulic kit (optional) safety valve setting is 3.5 bar.

Nominal power supply tolerance: 400 V +/– 10%; max. voltage unbalance: 3%.

See operation range Tables in which each model limits are indicated; for different values ask your agent.

Unit storage conditions:

- Between –20 °C and + 55 for 05 ÷ 21 units
- Between –20 °C and + 45 for 25 ÷ 75 units

MODEL		SBH05	SBH06	SBH07	SBH08	SBH10	SBH11	SBH15	SBH17
WORKING RANGE									
Max. outdoor temperature (5)	°C	45	45	44	45	45	44	44	45
Max. outdoor temperature (6)	°C	43	42	41	42	43	41	41	42
SAFETY DEVICES SETTINGS									
High pressure switch	bar	26							
High pressure safety valve	bar	–				29			

MODEL		SLH05	SLH06	SLH07	SLH08	SLH10	SLH11	SLH15	SLH17
WORKING RANGE									
Max. outdoor temperature (5)	°C	45	45	44	45	45	45	45	44
Max. outdoor temperature (6)	°C	42	42	42	42	43	42	42	41
SAFETY DEVICES SETTINGS									
High pressure switch	bar	26							
High pressure safety valve	bar	–				29			

MODEL		SBR21	SBH25	SBR30	SBR34	SBR43	SBR50	SBR60	SBR68	SBR75
WORKING RANGE										
Max. outdoor temperature (5)	°C	43	42	44	42	42	40	42	42	41
Max. outdoor temperature (6)	°C	41	40	42	40	40	38	40	40	39
Max. mixture flow	m^3/h	61.5	68.5	92	101	147.5	116	149	188	188
SAFETY DEVICES SETTINGS										
High pressure switch	bar	24								
High pressure safety valve	bar	27								
Low pressure safety valve	bar	–	17.3 (ISPESL)							

MODEL		SLR21	SLR25	SLR30	SLR34	SLR43	SLR50	SLR60	SLR68
WORKING RANGE									
Max. outdoor temperature (5)	°C	41	45	42	44	40	43	43	40
Max. outdoor temperature (6)	°C	39	43	40	42	38	41	41	38
Max. mixture flow	m^3/h	61.5	68.5	92	101	147.5	116	149	188
SAFETY DEVICES SETTINGS									
High pressure switch	bar	24							
High pressure safety valve	bar	27							
Low pressure safety valve	bar	–	17.3 (ISPESL)						

(5) With nominal air flow, mixture flow outlet at 10 °C and R22 refrigerant

(6) With nominal air flow, mixture flow outlet at 10 °C and R407c refrigerant

5.2 – Glycol mixture factor corrections

The water glycol mixtures are used as a thermal carrier fluid, in very cold climates with outdoor temperatures below 0 °C.

The use of low freezing point mixtures causes a modification in the main thermodynamic properties of the units. The main parameters affected by the use of glycol mixtures are the following:

- cooling capacity
- mixture volumetric flow
- pressure drop
- compressor power input

In the following table are reported correction factors referred to the most common ethylene glycol mixtures.

ETHYLENE GLYCOL (% in weight)		0	10	20	30	40 (*)	50 (*)
Freezing temperature	[°C]	0	−4.4	−9.9	−16.6	−25.2	−37.2
Refrigerant capacity correction factor	[F3]	1.032	1.023	1.013	1	0.989	0.981
Mixture volumetric flow rate correction factor	[F4]	0.911	0.916	0.956	1	1.048	1.102
Mixture side pressure drop correction factor	[F5]	0.856	0.902	0.950	1	1.056	1.122
Compressor power input correction factor	[F6]	1.010	1.010	1.005	1	0.995	0.985

(*) For installation operating with glycol solutions higher then 35% consult the Technical Support Department.

We indicate as R_0, V_0, P_0 respectively the unit capacity, volumetric flow rate and compressors power input with 30% ethylene glycol; when we use glycol mixtures with different % with the same inlet and outlet temperatures at the evaporator, the performance will vary as follows:

Refrigeration capacity = R_0 x F3

Volumetric flow rate = V_0 x F3 x F4

Mixture pressure drop = DP_1 x F5

Compressor power input = P_0 x F6

where $D P_1$ is the load loss calculated with the new mixture volumetric flow.

5.3 – Fouling factor corrections

FOULING FACTORS [10^{-4} m^2 °C / W]	EVAPORATOR	
	F1 capacity correction factor	F2 compressor power input correction factor
0.43	1	1
0.88	0.985	0.995
0.176	0.960	0.985
0.352	0.915	0.965

Unit performance reported in the tables are given for the condition exchanger with fouling factor corresponding at 0.43 x 10^{-4} m^2 °C / W. For different fouling factor values, performances should be corrected with the correction factors shown above.

6 – Dimensions, weights and refrigeration circuit diagrams

6.1. – Overall dimensions, electrical and chilled water connections

Models:
SBH 05/06/07, SLH 05/06

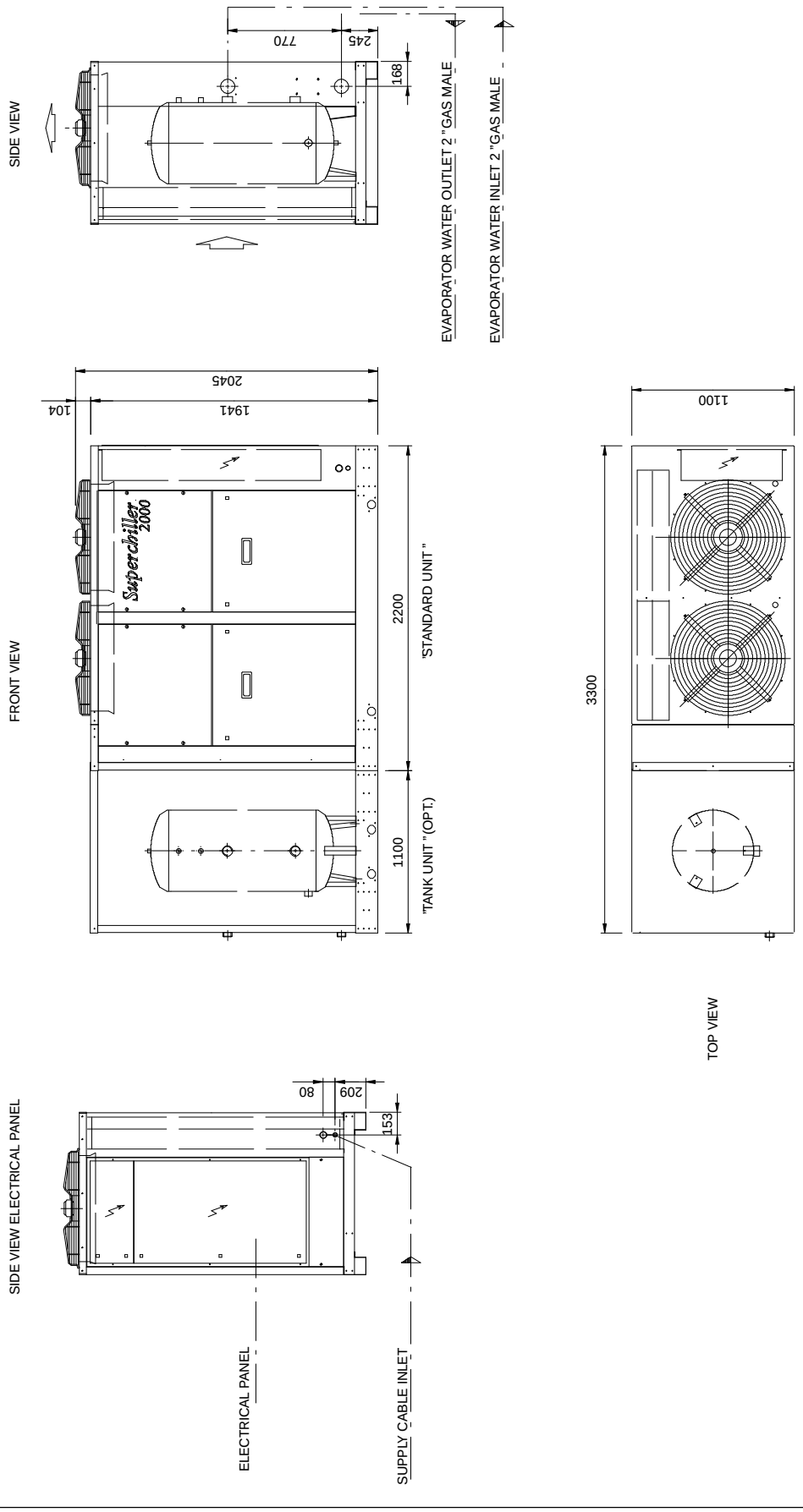

Models:
SBH 08/10/11, SLH 07/08

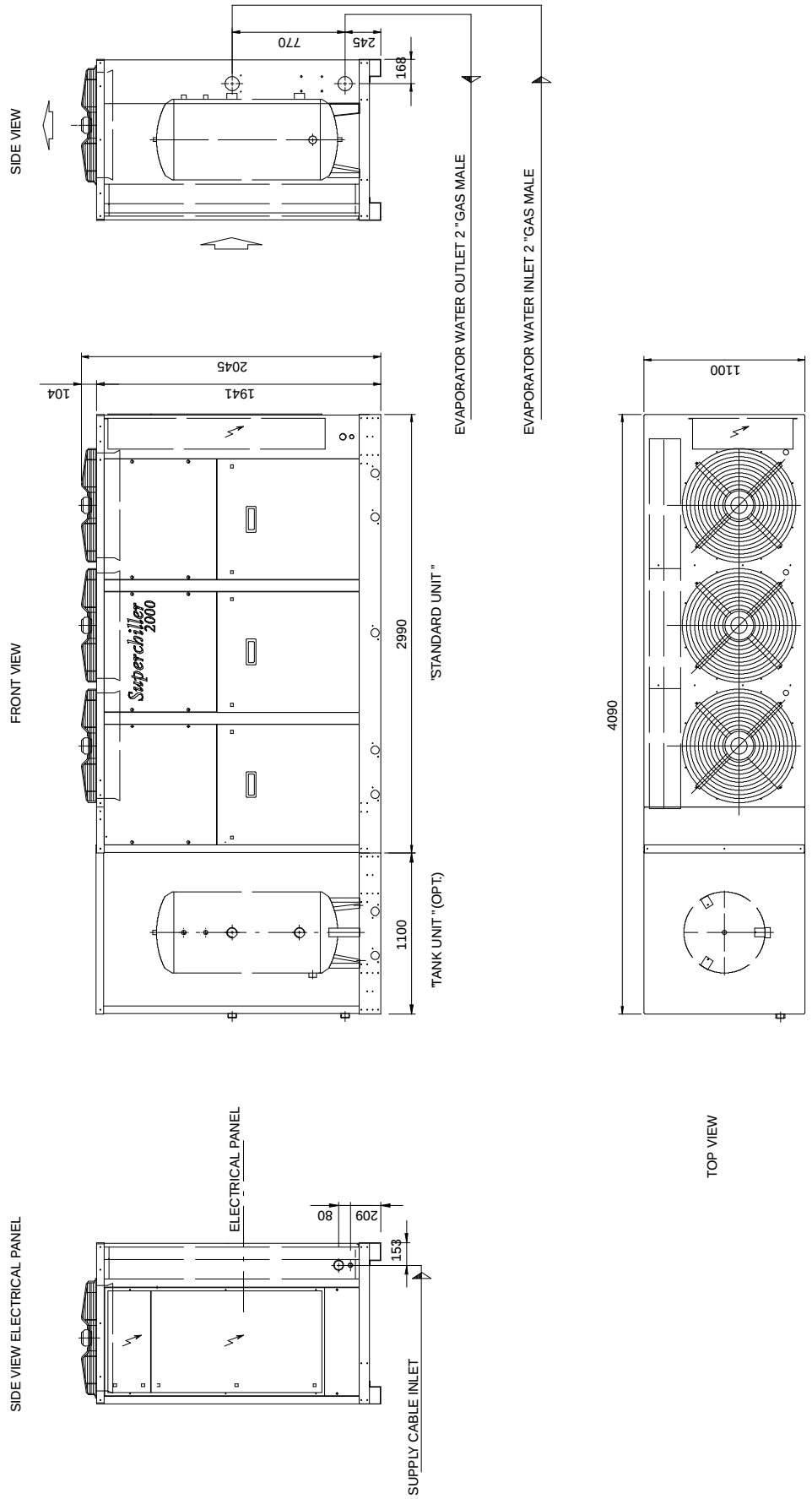

Models:
SBH 15, SLH 10/11

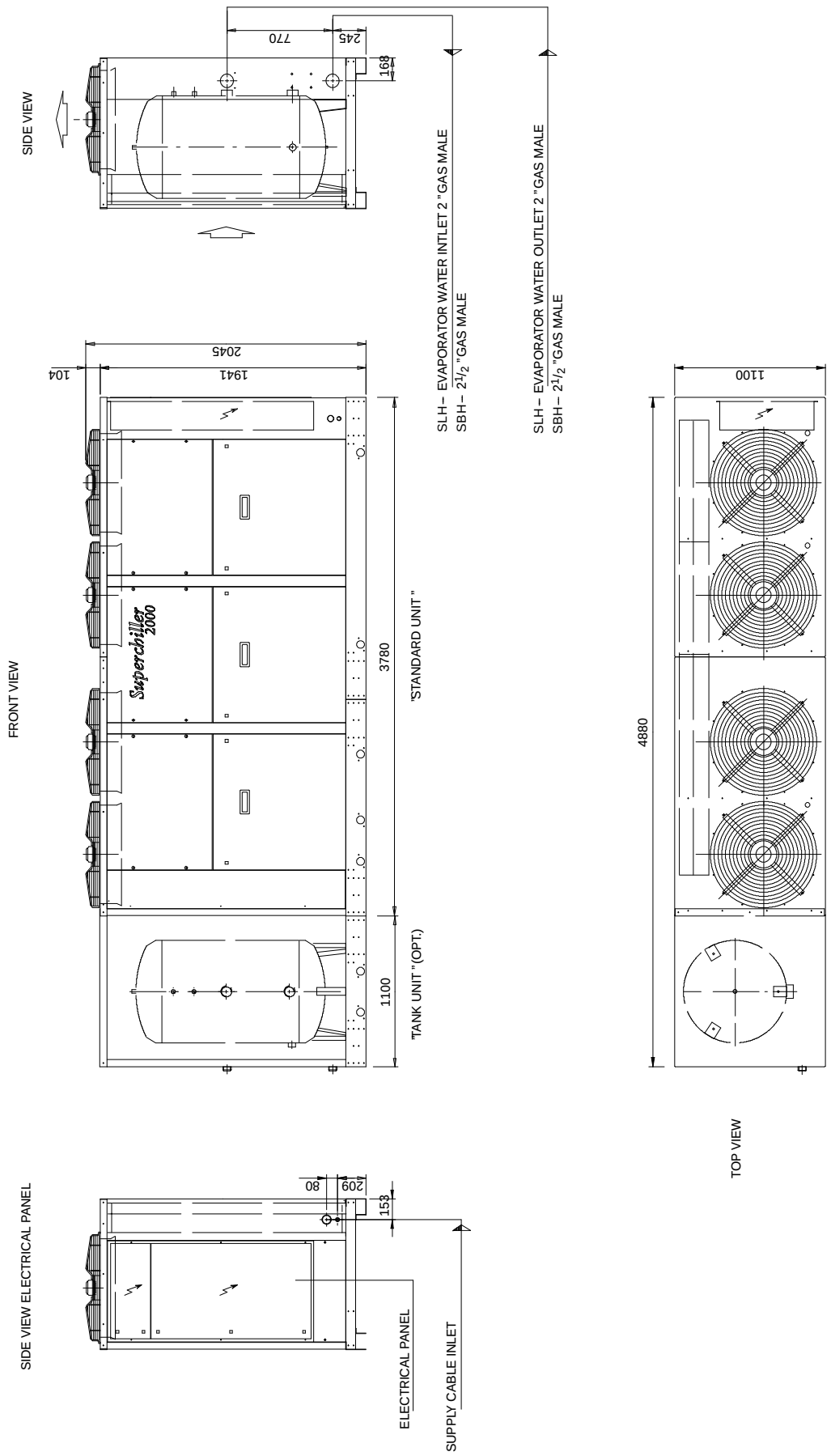

Models:
SBH 17, SLH 15/17

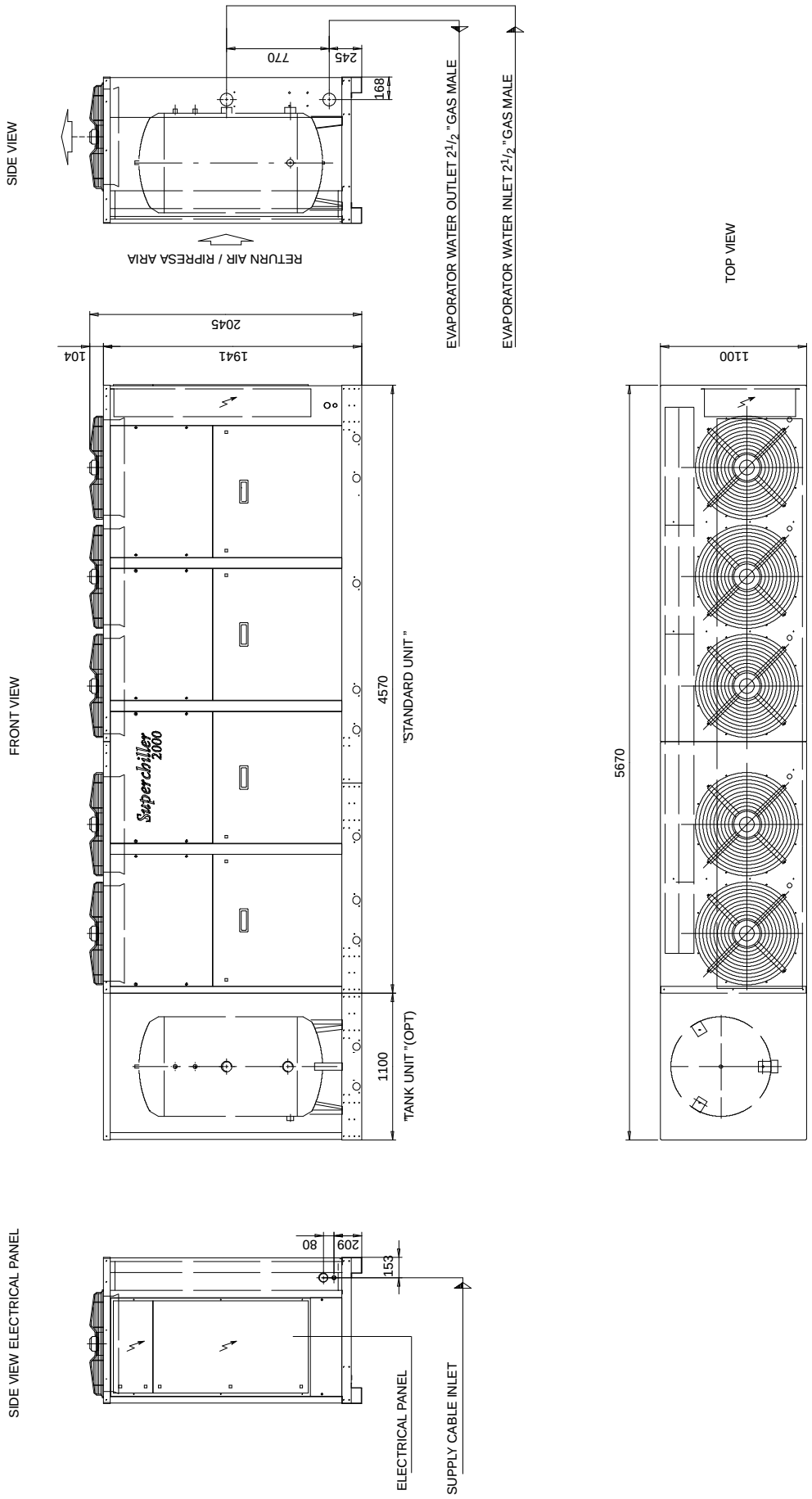

Models:
SBR 21/25, SLR 21

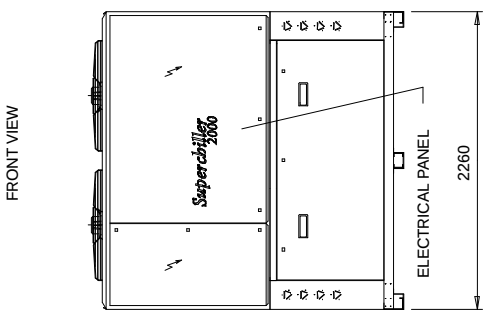

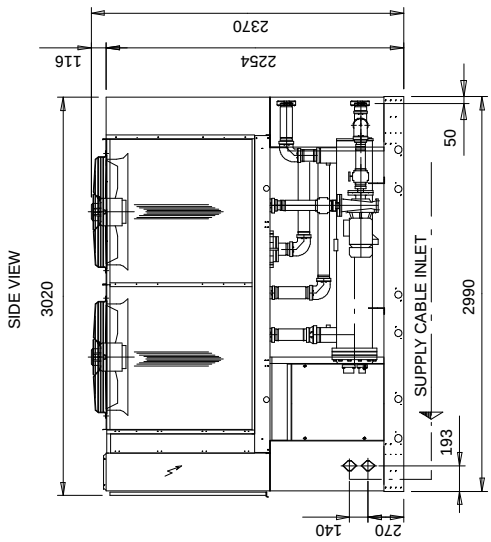

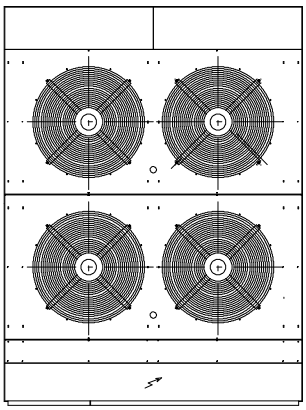

MODELS	victaulic connect.	Ø welded connect.
SBR 21/25 SLR 21	DN80 / Ø 3 ”	88,9 mm

MODELS	A STD.	A HP.	A 4P.
SBR 21	305	335	375
SBR 25	335	335	400
SLR 21	305	335	375

Pump group	
STD.	Pump 2 poles std head pressure
HP.	Pump 2 poles high head pressure
4P.	Pump 4 poles std head pressure

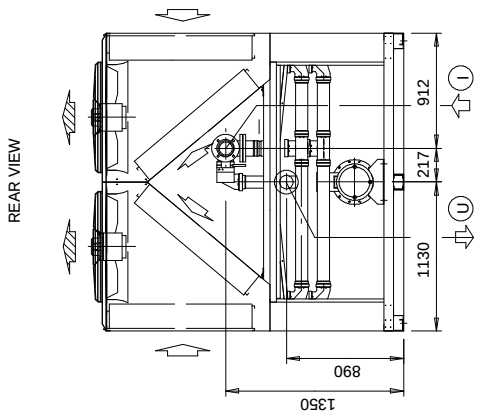

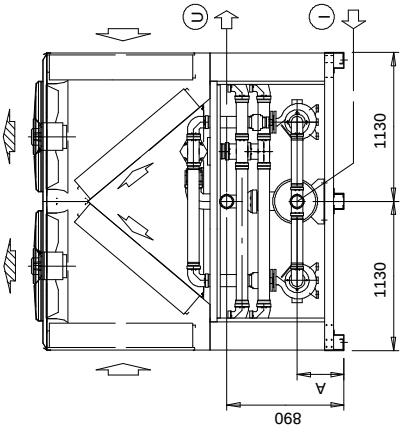

AIR DISCHARGE RETURN AIR

REAR VIEW – STD. UNIT + CHILLED WATER PUMPS

Models:
SBR 21/25, SLR 21

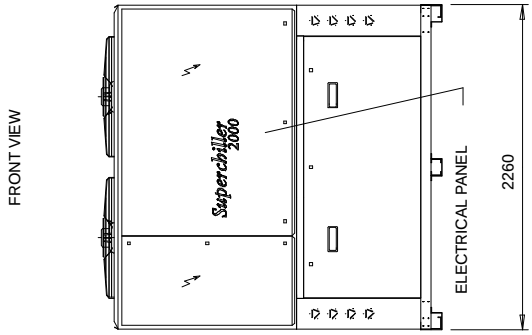

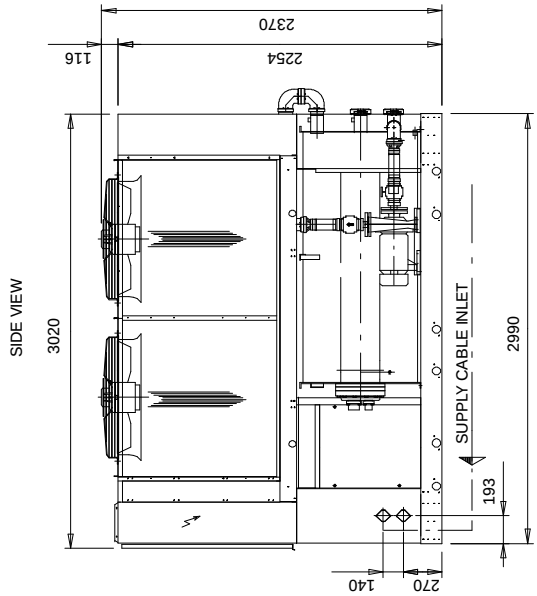

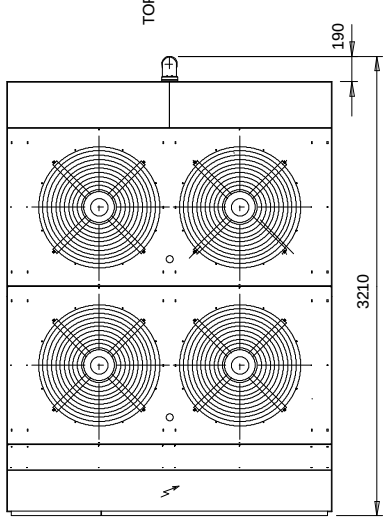

MODELS	victaulic connect.	Ø welded connect.
SBR 21/25 SLR 21	DN80 / Ø 3 "	88,9 mm

MODELS	A		
	STD.	HP.	4P.
SBR 21	305	335	375
SBR 25	335	335	400
SLR 21	305	335	375

Pump group	
STD.	Pump 2 poles std head pressure
HP.	Pump 2 poles high head pressure
4P.	Pump 4 poles std head pressure

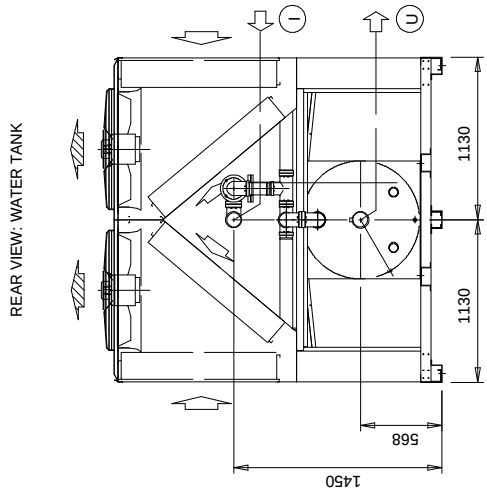

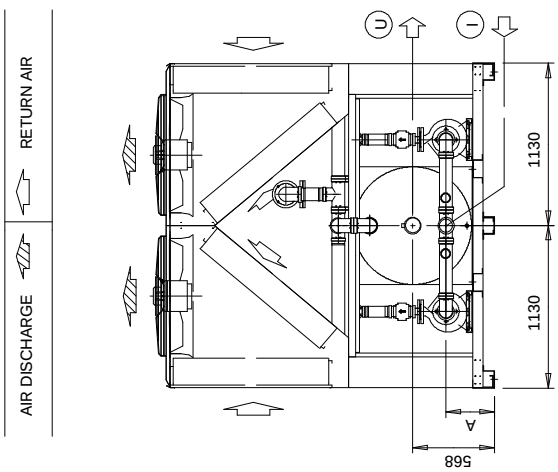

REAR VIEW – WATER TANK + CHILLED WATER PUMPS

Models:
SBR 30/34, SLR 25/30

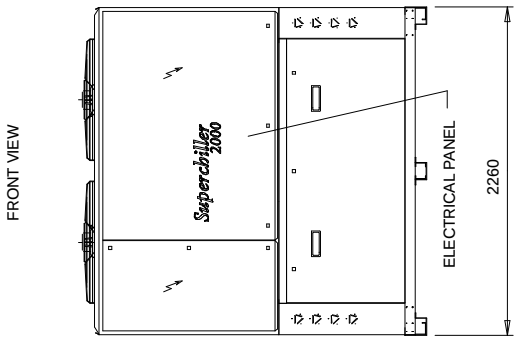

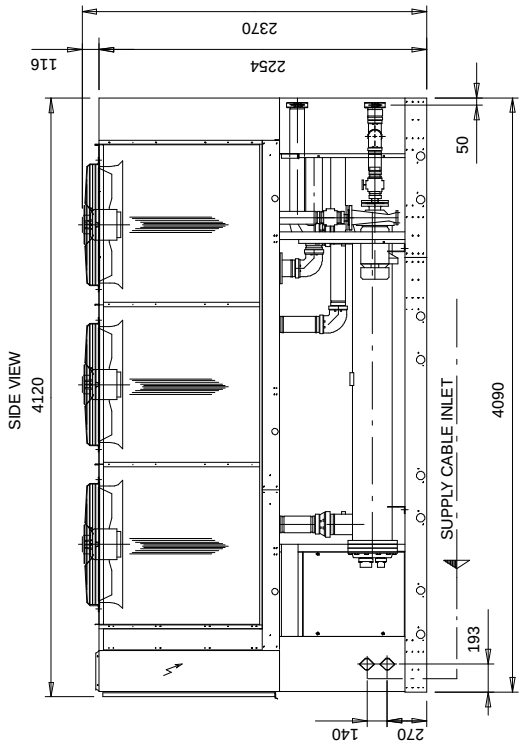

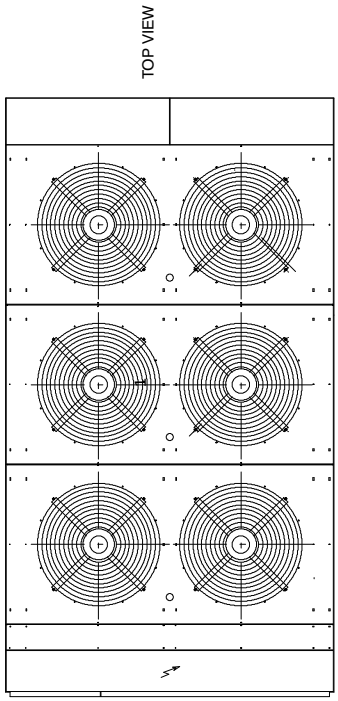

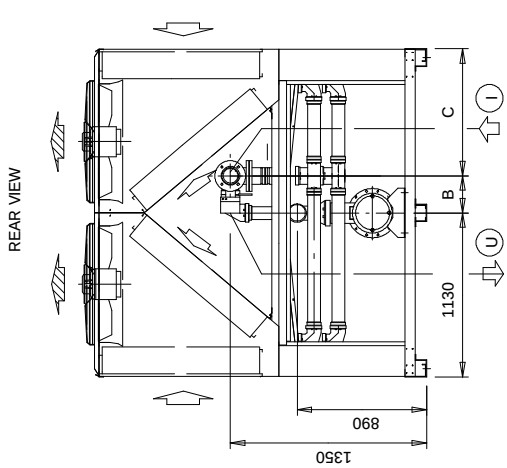

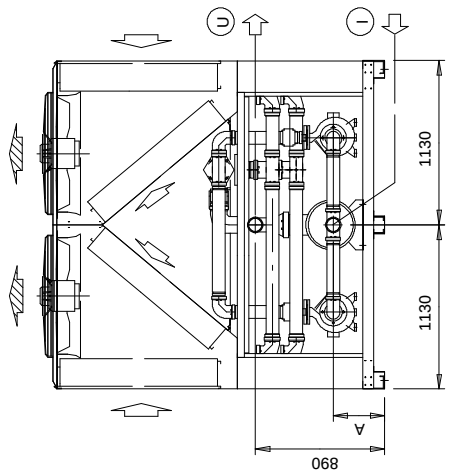

REAR VIEW – STD. UNIT + CHILLED WATER PUMPS

Pump group	
STD.	Pump 2 poles std head pressure
HP.	Pump 2 poles high head pressure
4P.	Pump 4 poles std head pressure

MODELS	DIMENSIONS A STD.	A HP.	A 4P.	B	C
SBR 30	335	335	400	255	875
SBR 34	335	335	375	255	875
SLR 25	335	335	400	217	913
SLR 30	335	335	400	255	875

MODELS	victaulic connect. Ø	welded connect.
SLR 25	DN80 / Ø 3”	88,9 mm
SBR 30/34 SLR 30	DN100 / Ø 4”	114,3 mm

Models:
SBR 30/34, SLR 25/30

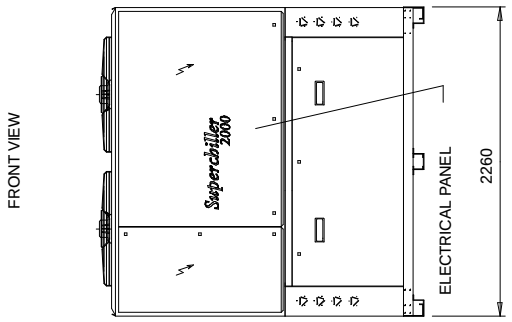

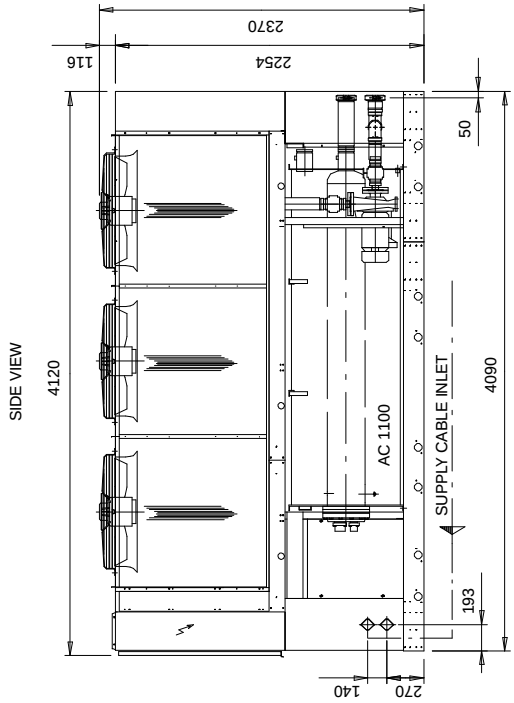

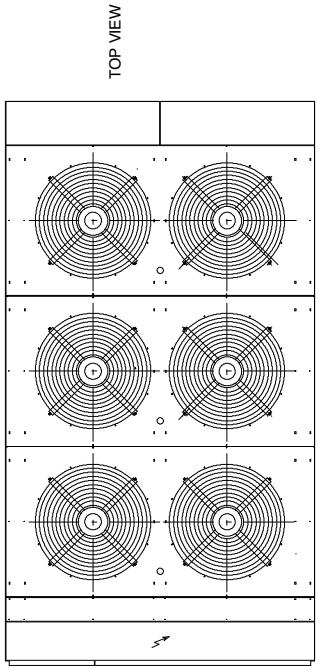

MODELS	victaulic connect.	Ø welded connect.
SLR 25	DN80 / Ø 3"	88,9 mm
SBR 30/34 SLR 30	DN100 / Ø 4"	114,3 mm

MODELS	DIMENSIONS A		
	STD.	HP.	4P.
SBR 30	335	335	400
SBR 34	335	335	375
SLR 25	335	335	400
SLR 30	335	335	400

Pump group	
STD.	Pump 2 poles std head pressure
HP.	Pump 2 poles high head pressure
4P.	Pump 4 poles std head pressure

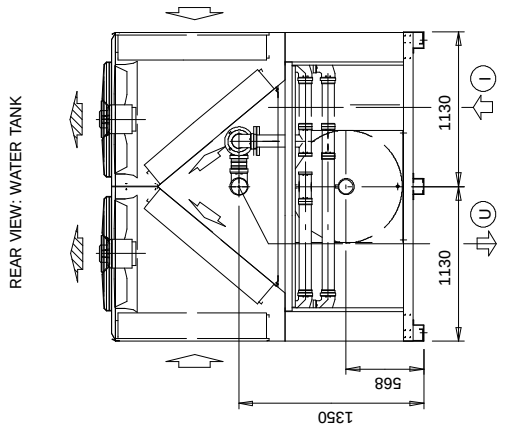

AIR DISCHARGE

RETURN AIR

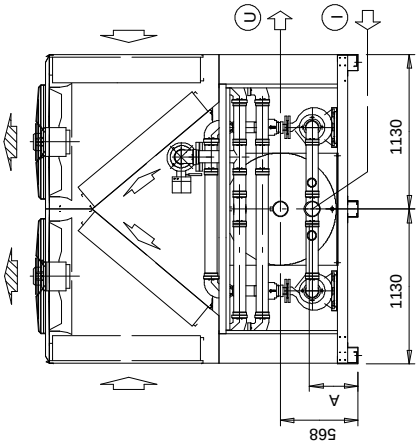

REAR VIEW – WATER TANK + CHILLED WATER PUMPS

Models:
SBR 43/50, SLR 34/43

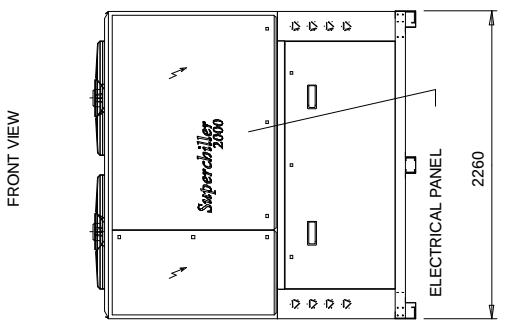

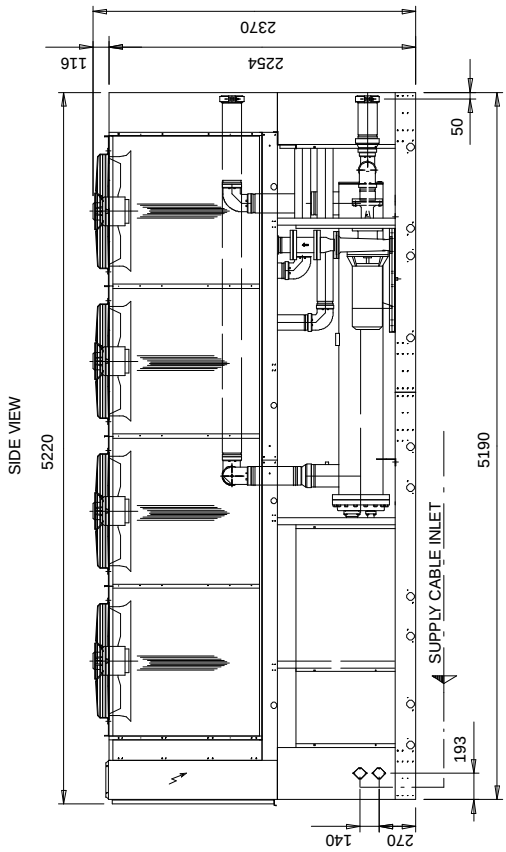

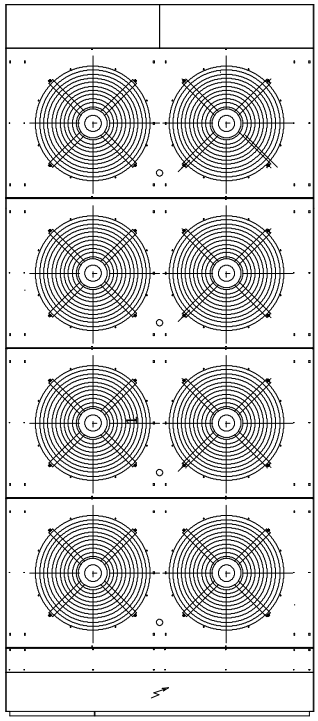

MODELS	victaulic connect.	Ø welded connect.
SBR 43 SLR 34/43	DN100 / Ø 4 "	114.3 mm
SBR 50	DN125 / Ø 5 "	139.7 mm

MODELS	DIMENSIONS A STD.	A HP.	A 4P	B	C
SBR 43	335	335	375	255	875
SBR 50	335	335	375	280	850
SLR 34	335	335	400	285	875
SLR 43	335	335	375	255	875

Pump group	
STD.	Pump 2 poles std head pressure
HP.	Pump 2 poles high head pressure
4P.	Pump 4 poles std head pressure

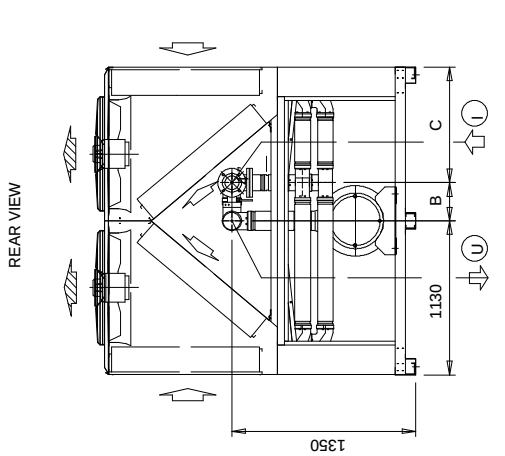

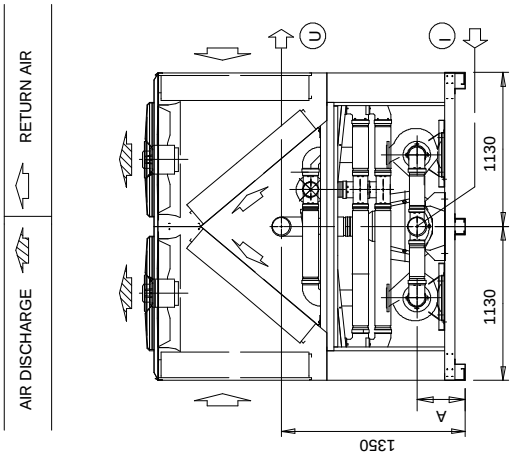

REAR VIEW – STD. UNIT + CHILLED WATER PUMPS

Models:
SBR 43/50, SLR 34/43

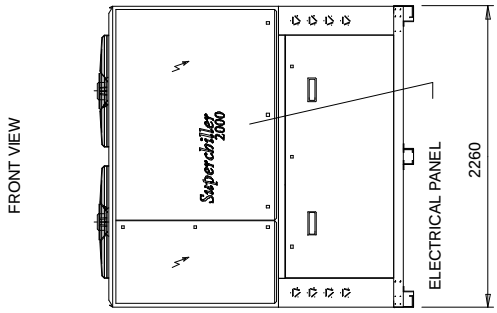

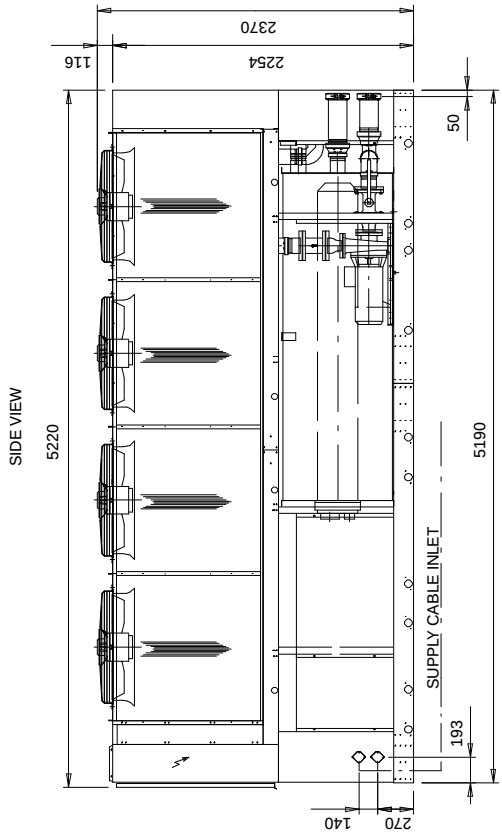

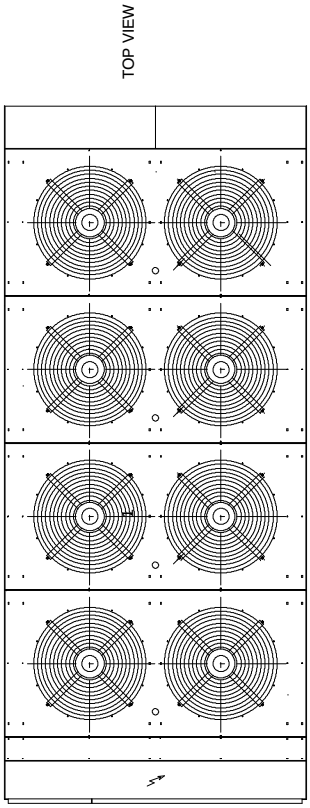

MODELS	victaulic connect.	Ø welded connect.
SBR 43 SLR 34/43	DN100 / Ø 4"	114.3 mm
SBR 50	DN125 / Ø 5"	139.7 mm

MODELS	A		
	STD.	HP.	4P.
SBR 43	335	335	375
SBR 50	335	335	375
SLR 34	335	335	400
SLR 43	335	335	375

Pump group	
STD.	Pump 2 poles std head pressure
HP.	Pump 2 poles high head pressure
4P.	Pump 4 poles std head pressure

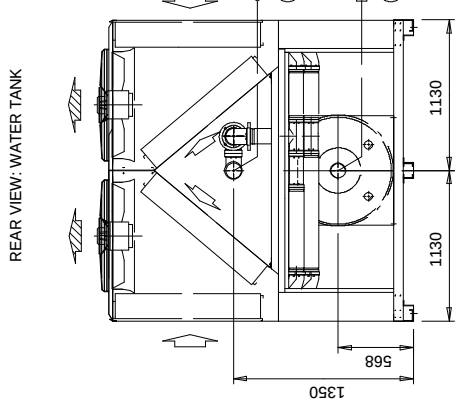

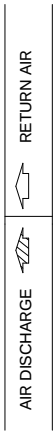

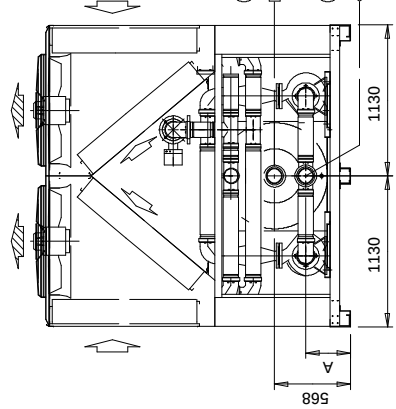

REAR VIEW – WATER TANK + CHILLED WATER PUMPS

Models:
SBR 60, SLR 50

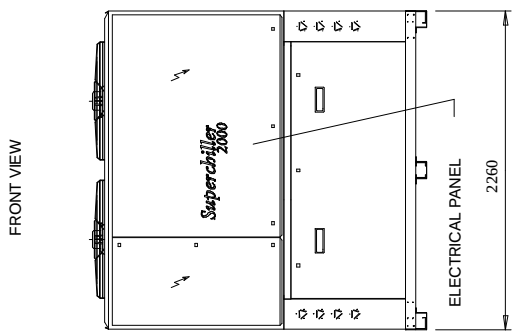

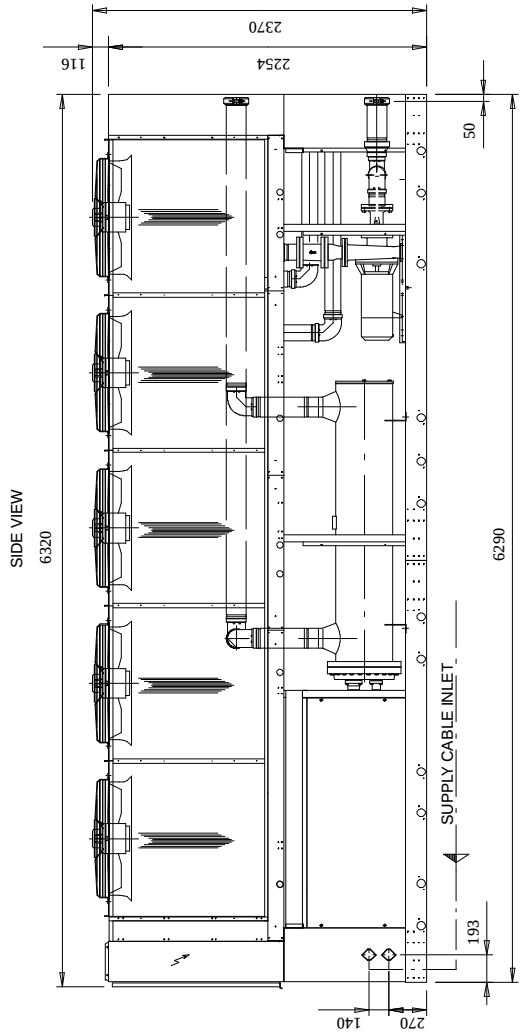

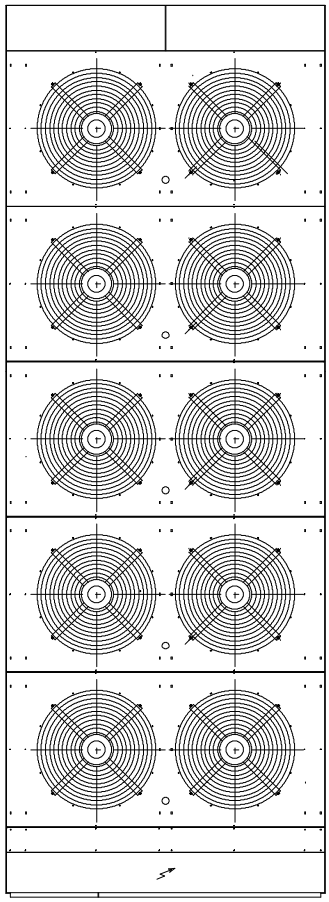

MODELS	victaulic connect.	welded connect.
	Ø	
SBR 60 SLR 50	DN125 / Ø 5"	13987 mm

MODELS	A		
	STD.	HP.	4P.
SBR 60	335	355	435
SLR 50	335	335	375

Pump group	
STD.	Pump 2 poles std head pressure
HP.	Pump 2 poles high head pressure
4P.	Pump 4 poles std head pressure

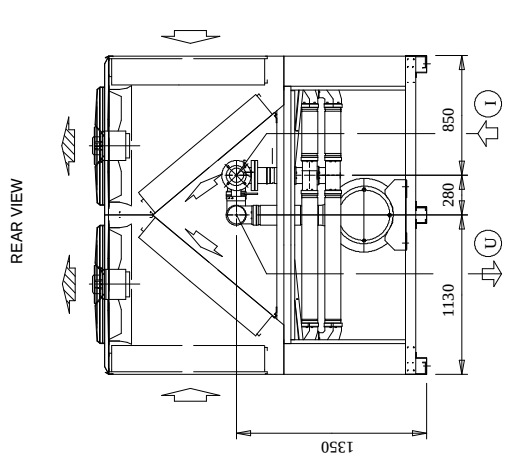

AIR DISCHARGE RETURN AIR

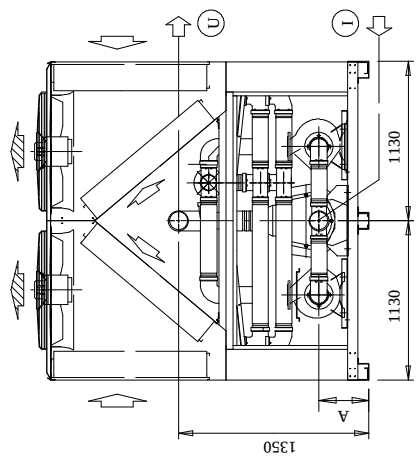

REAR VIEW – STD. UNIT + CHILLED WATER PUMPS

Models:
SBR 60, SLR 50

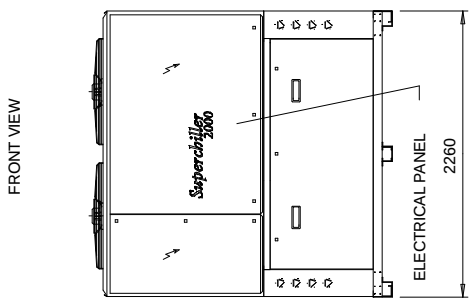

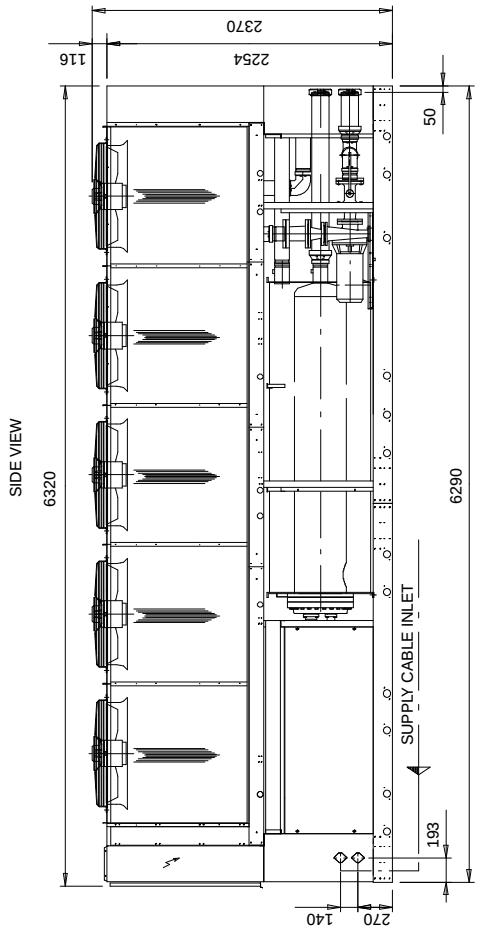

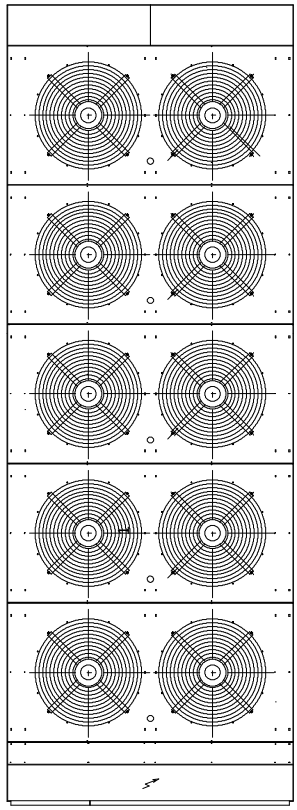

MODELS	victaulic connect.	welded connect.
	Ø	
SBR 60 SLR 50	DN125 / Ø 5 "	13987 mm

MODELS	A		
	STD.	HP.	4P.
SBR 60	335	355	435
SLR 50	335	335	375

Pump group	
STD.	Pump 2 poles std head pressure
HP.	Pump 2 poles high head pressure
4P.	Pump 4 poles std head pressure

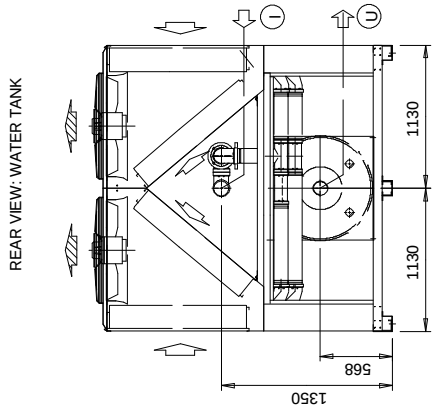

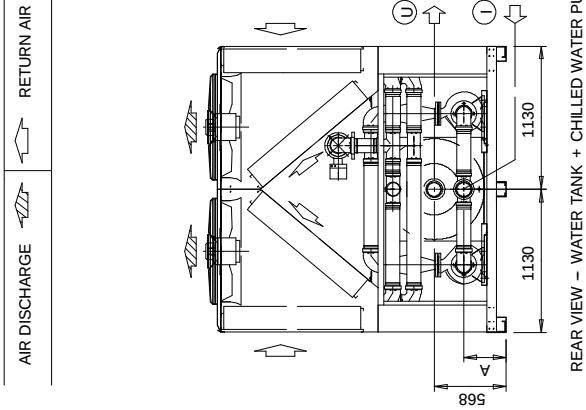

Models:
SBR 68/75, SLR 60/68

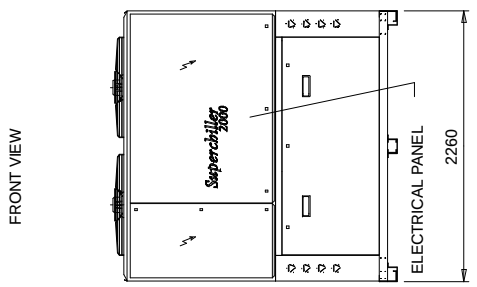

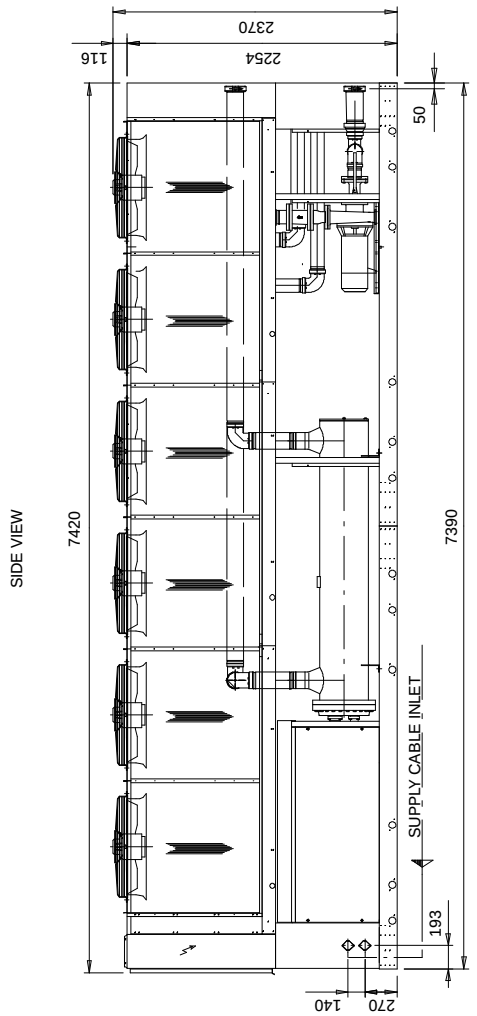

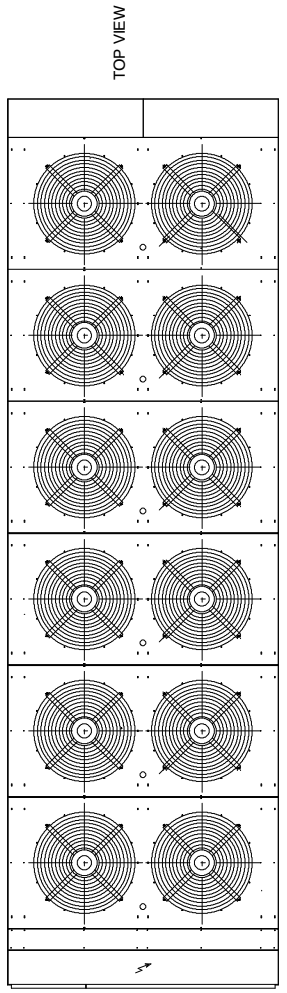

MODELS	victaulic connect.	welded connect.
SBR 68/75 SLR 60/68	DN125 / Ø 5 ”	139,7 mm

MODELS	A		
	STD.	HP.	4P.
SBR 68	355	355	435
SBR 75	355	355	425
SLR 60	355	355	435
SLR 68	355	355	435

Pump group	
STD.	Pump 2 poles std head pressure
HP.	Pump 2 poles high head pressure
4P.	Pump 4 poles std head pressure

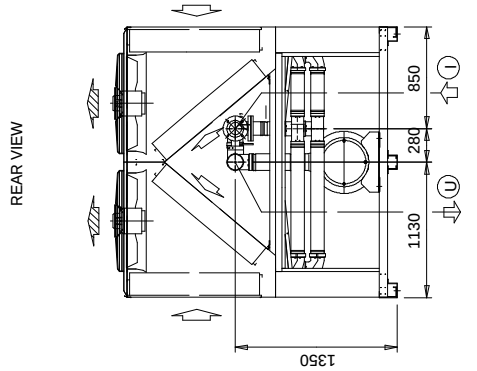

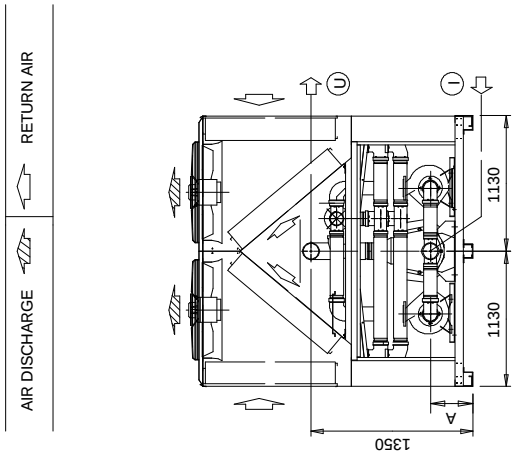

AIR DISCHARGE
RETURN AIR

REAR VIEW – STD. UNIT + CHILLED WATER PUMPS

Models:
SBR 68/75, SLR 60/68

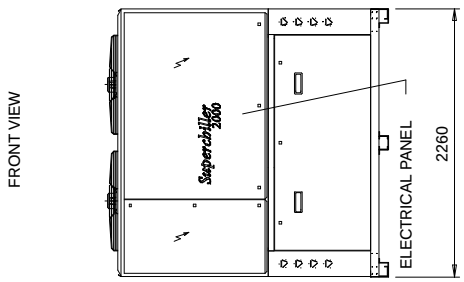

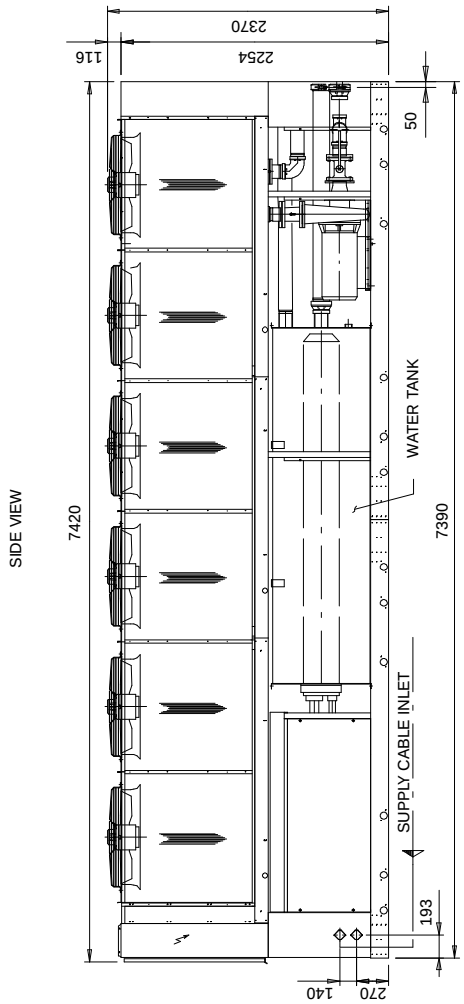

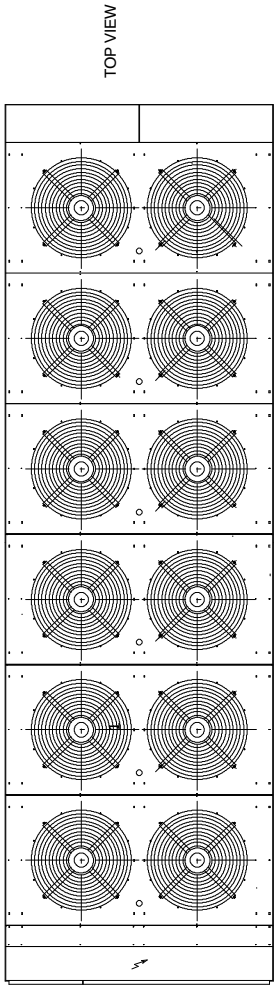

MODELS	Ø	
	victaulic connect.	welded connect.
SBR 68/75 SLR 60/68	DN125 / Ø 5 "	139,7 mm

MODELS	A		
	STD.	HP.	4P.
SBR 68	355	355	290
SBR 75	355	355	290
SLR 60	355	355	290
SLR 68	355	355	290

Pump group	
STD.	Pump 2 poles std head pressure
HP.	Pump 2 poles high head pressure
4P.	Pump 4 poles std head pressure

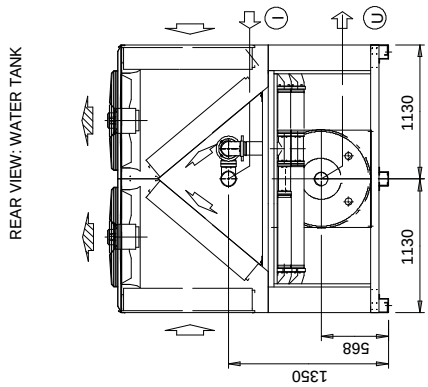

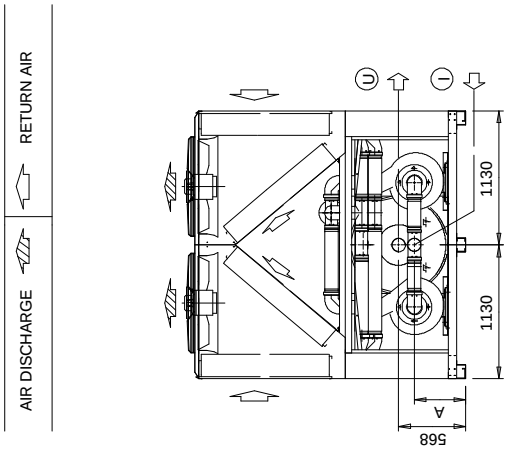

6.2 – Support positions and loads (Note: weights referred to standard units)

SBH--SLH models

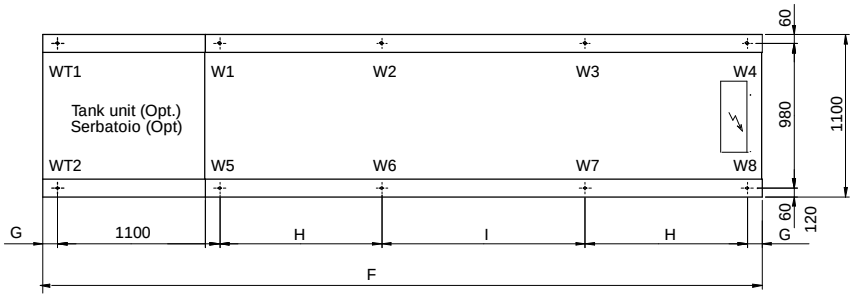

Base frame: fixing holes O 20

MODEL	DIMENSIONS [mm]			
	F	G	H	I
SBH 05/06/07, SLH 05/06	3300	100	–	2000
SBH 08/10/11, SLH 07/08	4090	100	1395	–
SBH 15/ SLH 10/11	4880	100	1100	1380
SBH 17, SLH 15/17	5670	100	1100	2170

MODEL	WEIGHT DISTRIBUTION [kg]							
	W1	W2	W3	W4	W5	W6	W7	W8
SBH 05	178	–	–	215	219	–	–	265
SBH 06	178	–	–	215	219	–	–	265
SBH 07	207	–	–	243	240	–	–	281
SBH 08	145	187	–	187	173	224	–	224
SBH 10	187	228	–	228	219	268	–	268
SBH 11	187	228	–	228	219	268	–	268
SBH 15	191	191	220	220	219	219	252	252
SBH 17	214	214	269	269	238	238	298	298
SLH 05	181	–	–	218	226	–	–	272
SLH 06	202	–	–	241	231	–	–	275
SLH 07	147	186	–	186	176	223	–	223
SLH 08	167	211	–	211	183	232	–	232
SLH 10	171	171	219	219	191	191	246	246
SLH 11	171	171	219	219	191	191	246	246
SLH 15	215	215	265	265	239	239	295	295
SLH 17	218	218	271	271	245	245	306	306

MODEL	WEIGHT DISTRIBUTION WITH TANK [kg]									
	WT1	W1	W2	W3	W4	WT2	W5	W6	W7	W8
SBH 05	205	205	–	–	255	225	225	–	–	281
SBH 06	205	205	–	–	255	225	225	–	–	281
SBH 07	219	219	–	–	286	232	232	–	–	302
SBH 08	193	193	205	–	205	210	210	223	–	223
SBH 10	316	316	248	–	248	337	337	264	–	264
SBH 11	316	316	248	–	248	337	337	264	–	264
SBH 15	293	293	293	217	217	308	308	308	228	228
SBH 17	306	306	306	271	271	316	316	316	281	281
SLH 05	205	205	–	–	260	228	228	–	–	289
SLH 06	216	216	–	–	282	228	228	–	–	298
SLH 07	193	193	203	–	203	211	211	222	–	222
SLH 08	204	204	228	–	228	211	211	235	–	235
SLH 10	280	280	280	212	212	293	293	293	221	221
SLH 11	280	280	280	212	212	293	293	293	221	221
SLH 15	306	306	306	268	268	317	317	317	277	277
SLH 17	307	307	307	275	275	321	321	321	288	288

SBR-- SLR models

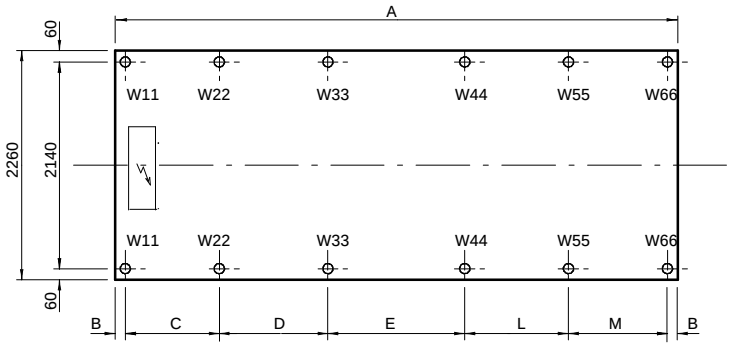

Base frame: fixing holes O 20

MODEL	DIMENSIONS [mm]						
	A	B	C	D	E	L	M
SBR 21/25, SLR 21	2990	100	1100	1690	–	–	–
SBR 30/34, SLR 25/30	4090	100	1100	1690	1100	–	–
SBR 43/50, SLR 34/43	5190	100	1100	1690	1100	1100	–
SBR 60, SLR 50	6290	100	1100	1690	2200	1100	–
SBR 68/75, 60/68	7390	100	1100	1690	2200	1100	1100

MODEL	WEIGHT DISTRIBUTION [kg]					
	W11	W22	W33	W44	W55	W66
SBR 21	504	504	367	–	–	–
SBR 25	566	566	371	–	–	–
SBR 30	614	614	334	334	–	–
SBR 34	610	610	337	337	–	–
SBR 43	626	626	626	319	319	–
SBR 50	705	705	705	322	322	–
SBR 60	772	772	772	420	420	–
SBR 68	814	814	814	375	375	375
SBR 75	870	870	870	341	341	341
SLR 21	514	514	367	–	–	–
SLR 25	612	612	309	309	–	–
SLR 30	625	625	333	333	–	–
SLR 34	586	586	586	236	236	–
SLR 43	637	637	637	318	318	–
SLR 50	767	767	767	408	408	–
SLR 60	797	797	797	369	369	369
SLR 68	826	826	826	375	375	375

MODEL	WEIGHT DISTRIBUTION WITH TANK [kg]					
	W11	W22	W33	W44	W55	W66
SBR 21	594	594	667	–	–	–
SBR 25	656	656	671	–	–	–
SBR 30	737	737	536	536	–	–
SBR 34	732	732	540	540	–	–
SBR 43	698	698	698	536	536	–
SBR 50	797	797	797	508	508	–
SBR 60	929	929	929	621	621	–
SBR 68	987	987	987	494	494	494
SBR 75	1043	1043	1043	460	460	460
SLR 21	604	604	667	–	–	–
SLR 25	732	732	430	430	–	–
SLR 30	747	747	536	536	–	–
SLR 34	734	734	734	339	339	–
SLR 43	709	709	709	535	535	–
SLR 50	891	891	891	546	546	–
SLR 60	970	970	970	488	488	488
SLR 68	999	999	999	494	494	494

6.3 – Transport

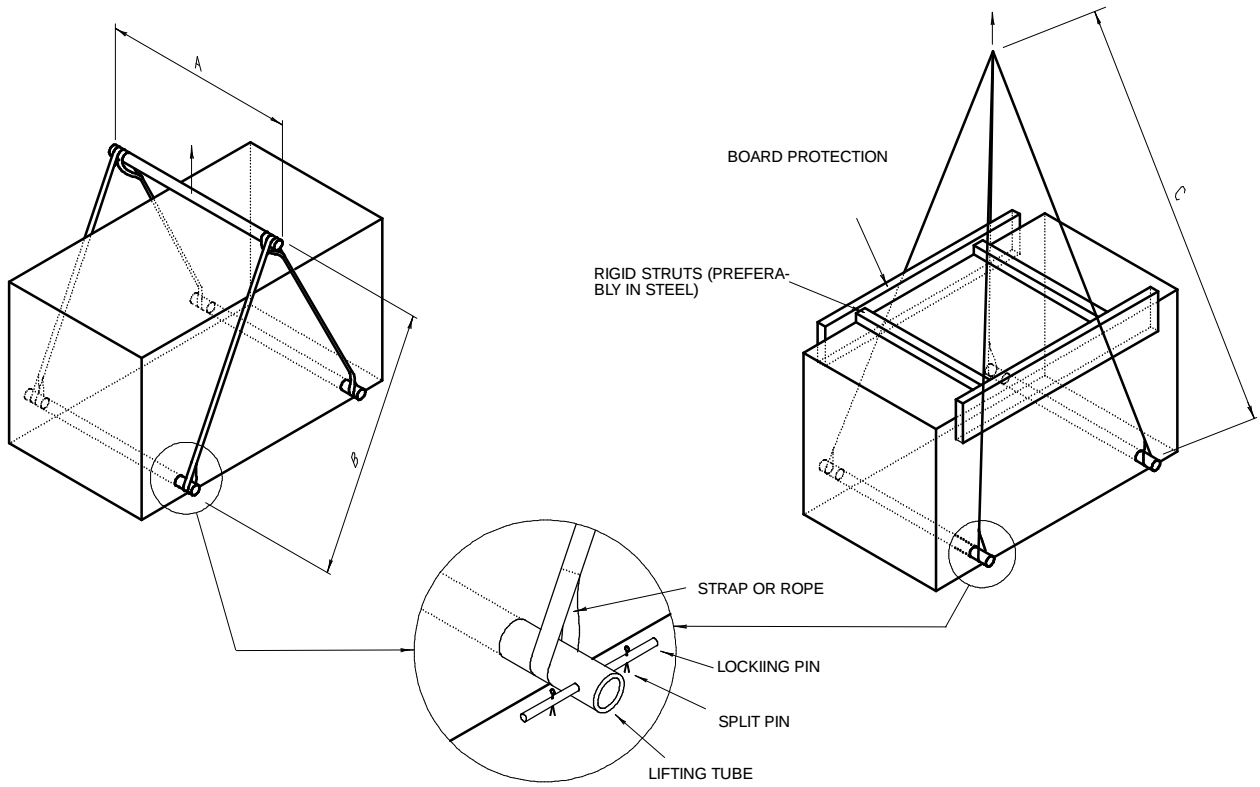

N.B:
Place the lifting tubes in the holes in the base indicated by the word 'lifting'. Lock the ends of the tubes in position with the locking pins and split pins as shown above.
The capacity of the lifting gear must be adequate to lift the load in question. Check the weight of the Superchiller 2000 units, the capacity of the lifting gear and ropes and the condition and suitability of the aforementioned equipment.
Lift the unit with a speed suitable for the load to be moved, so as not to damage the Superchiller structure.

MODEL	DIMENSIONS [mm]		
	A	B	C
SBH 05 – SBH 11 SLH 05 – SLH 08	1600	~ 3000	~ 8000
SBH 15 – SBH 17 SLH 10 – SLH 17	1600	~ 4000	~ 8000
SBR 21 – SBR 50 SLR 21 – SLR 43	2800	~ 4000	~ 10000
SBR 60 – SBR 75 SLR 50 – SLR 68	2800	~ 5500	~ 10000

6.4 – Service areas (top view)

NOTES
(*) Minimum distances between 2 Superchiller units from condensing coil side: 3 m.
(*) Do not obstruct the air exiting from fans for a minimum distance of 2.5 m.

6.5 – Principle refrigeration circuit

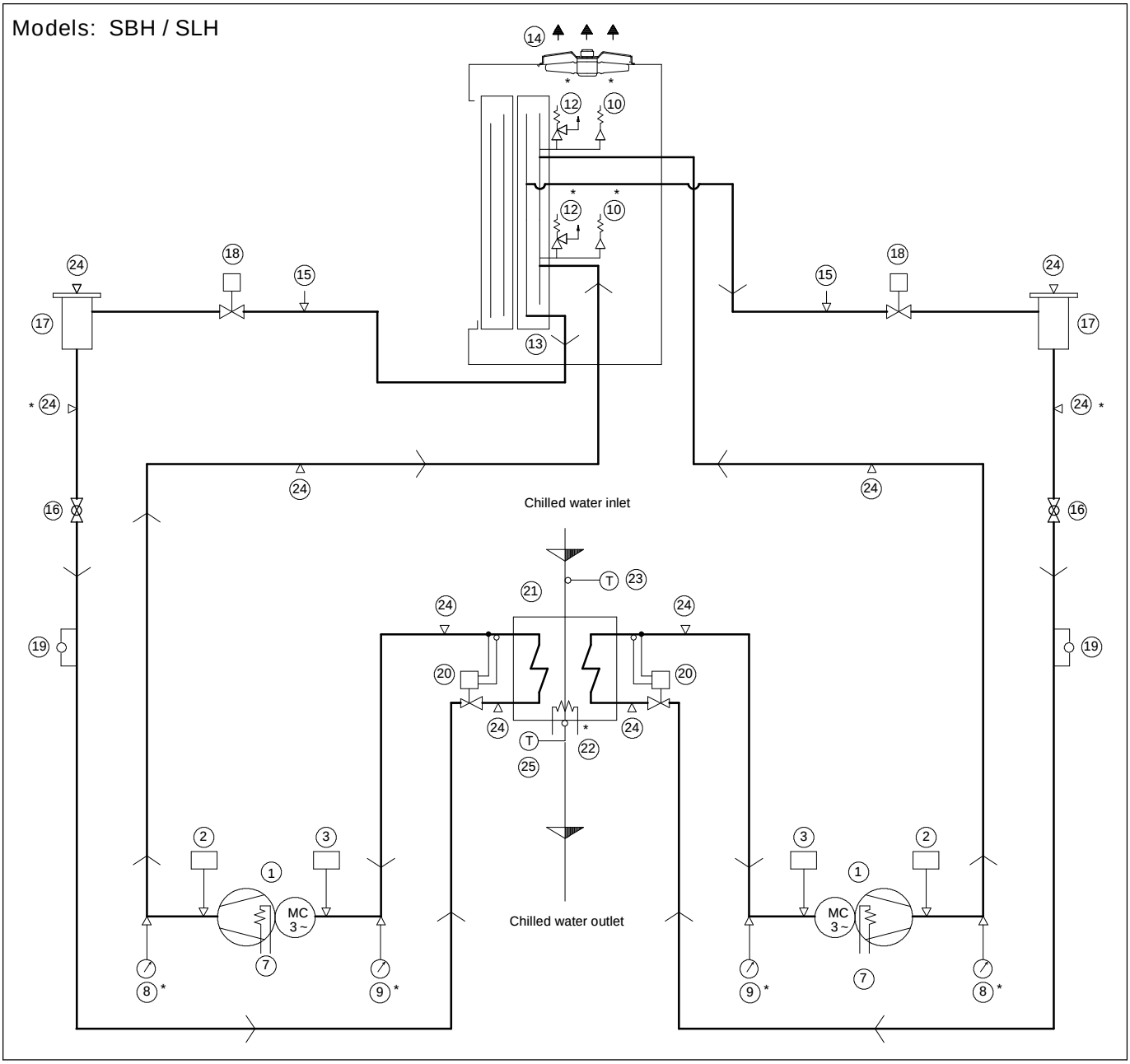

POS.	DESCRIPTION	POS.	DESCRIPTION
1	Compressor	15	Pressure transducer
2	High pressure switch (HP)	17	Filter dryer
3	Low pressure switch (LP)	18	Solenoid valve
7	Crankcase heater	19	Sight glass
8	High pressure manometer (opt.)	20	Thermostatic valve
9	Low pressure manometer (opt.)	21	Evaporator
10	Fuse cup (* for models 05 – 08 only)	22	Antifreeze heater (opt.)
12	Safety valve (* for models 10 – 17 only)	23	Service thermostat sensor
13	Condenser	24	Charge connection (* for models 05 – 08 only)
14	Fans	25	Antifreeze sensor

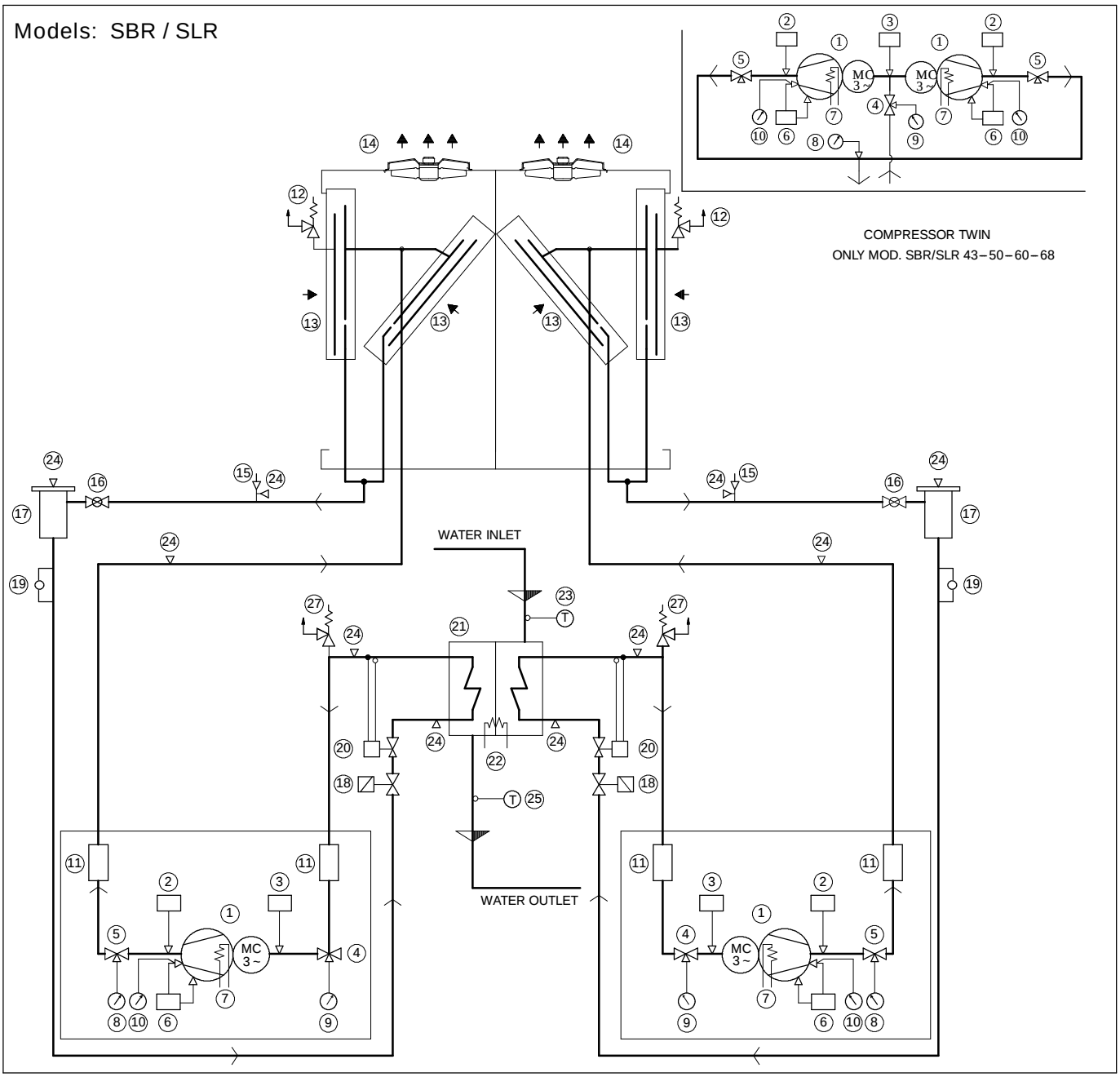

POS.	DESCRIPTION	POS.	DESCRIPTION
1	Compressor	14	Fans
2	High pressure switch (HP)	15	Pressure transducer
3	Low pressure switch (LP)	16	Ball tap
4	Suction valve	17	Filter dryer
5	Discharge vavle	18	Solenoid valve
6	Oil differential pressure switch	19	Sight glass
7	Crankcase heater	20	Thermostatic valve
8	High pressure manometer	21	Evaporator
9	Low pressure manometer	22	Antifreeze heater (opt.)
10	Oil pressure manometer	23	Service thermostat sensor
11	Flexible pipe + discharge muffler (only SLR models)	24	Charge connection
12	Safety valve	25	Antifreeze sensor
13	Condenser	27	ISPESL safety valve (SBR/SLR 21 excluded)

6.6 – Hydraulic circuit without pump

Models: SBH / SLH

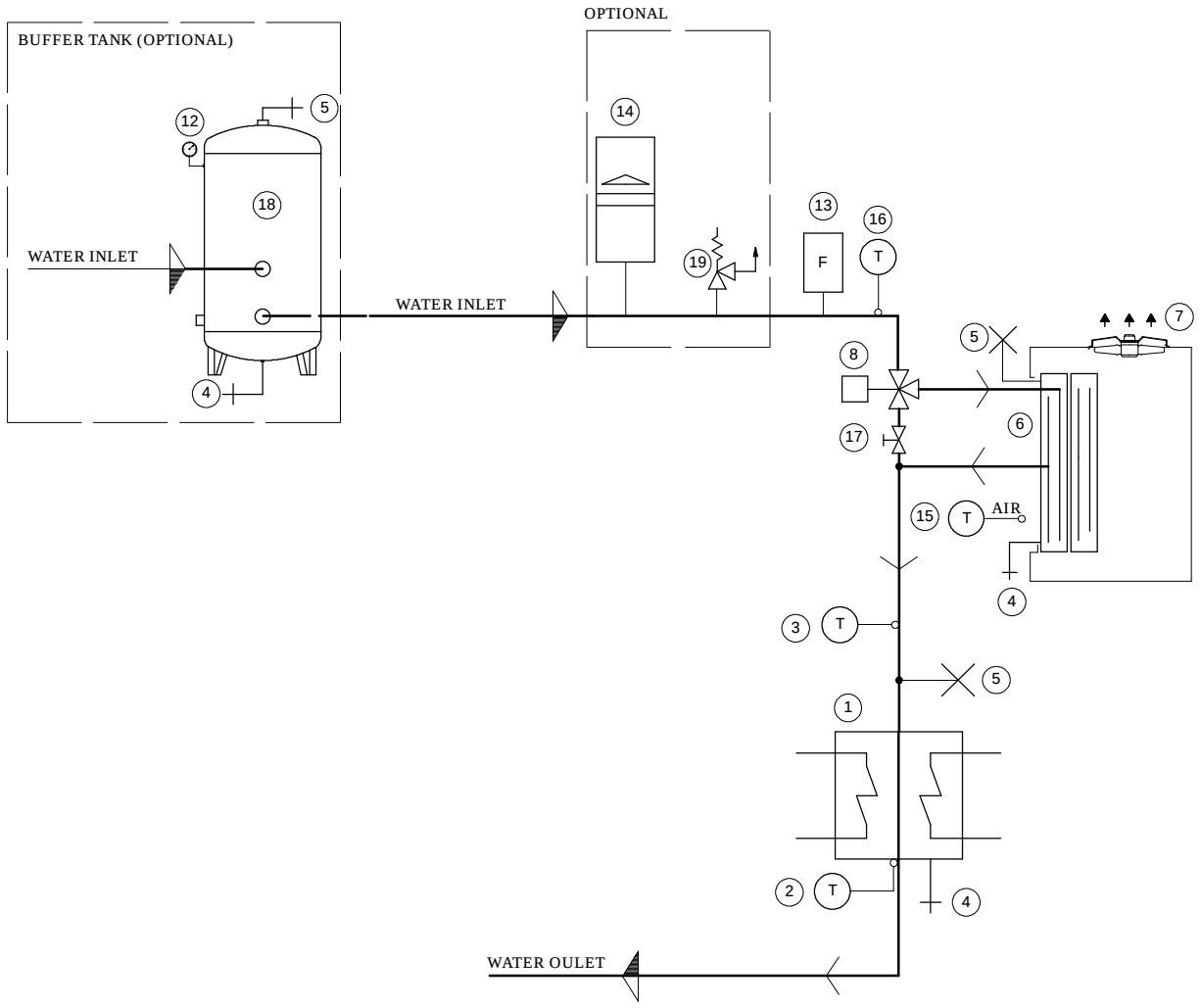

Models: SBH / SLH

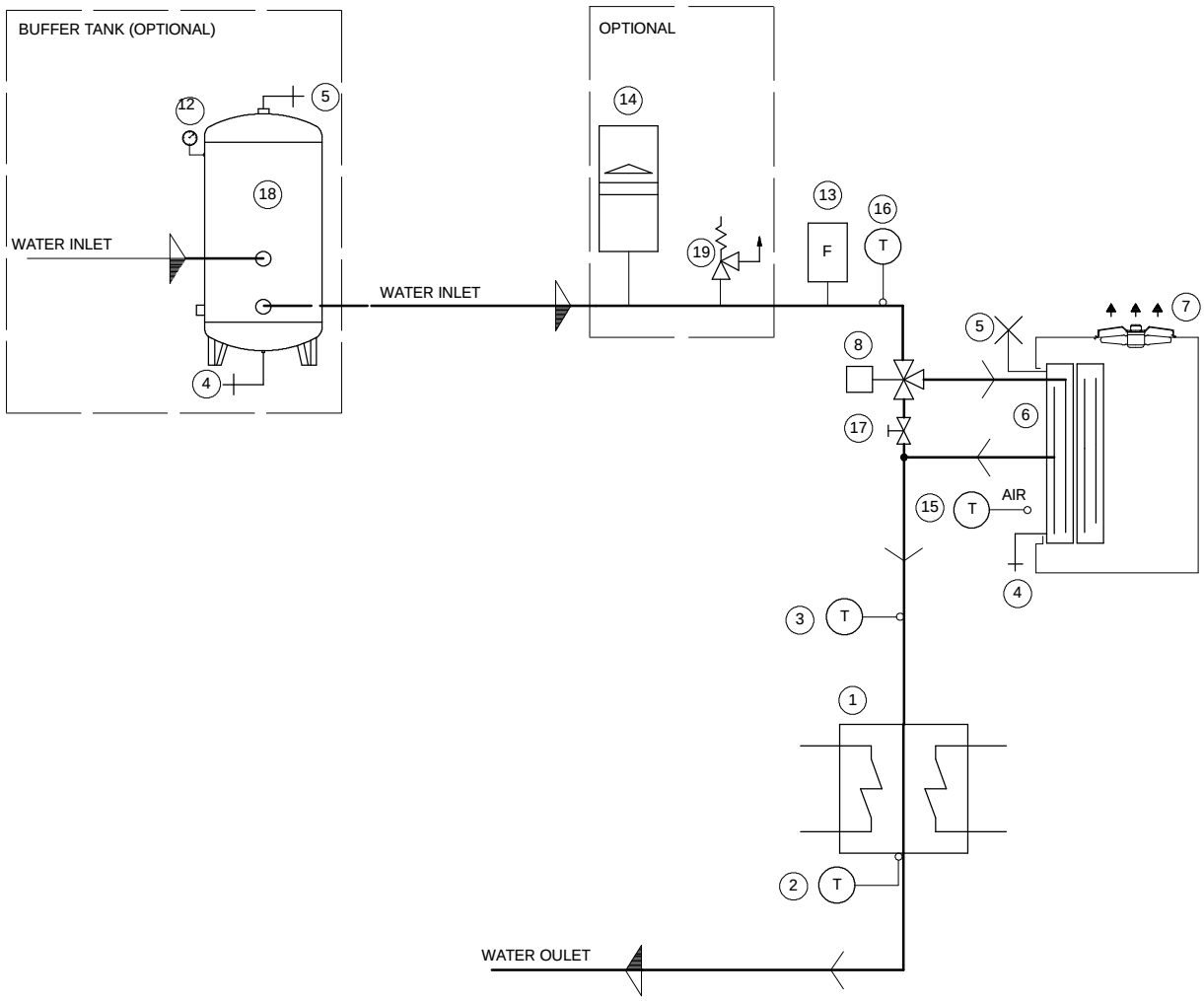

POS.	DESCRIPTION	POS.	DESCRIPTION
1	Evaporator	12	Pressure gauge
2	Antifreeze thermostat sensor	13	Flow switch
3	Service thermostat sensor	14	Expansion tank
4	Discharge valve	15	Air temperature sensor
5	Manual air valve	16	Control freecooling thermostat sensor
6	Freecooling coil	17	Gate valve
7	Fans	18	Storage tank
8	3–way valve	19	Safety valve

Models: SBR / SLR

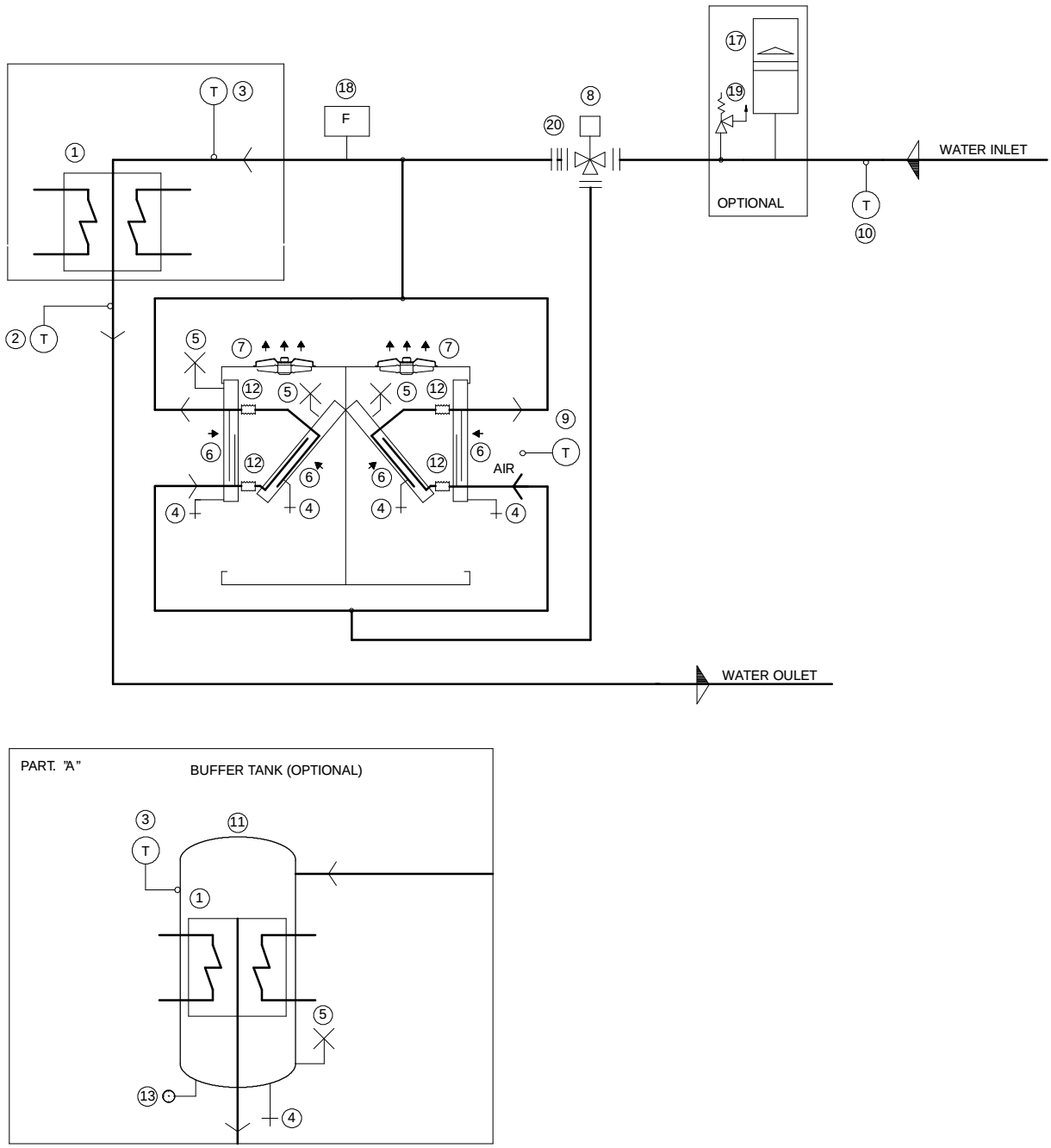

POS.	DESCRIPTION	POS.	DESCRIPTION
1	Evaporator	11	Storage tank
2	Antifreeze thermostat sensor	12	Flexible joint
3	Service thermostat sensor	13	Pressure gauge
4	Discharge valve	–	–
5	Manual air valve	–	–
6	Freecooling coil	–	–
7	Fans	17	Expansion tank
8	3–way valve	18	Flow switch
9	Air temperature sensor	19	Safety valve
10	Control freecooling thermostat sensor	20	Calibrate baffle

6.7 – Hydraulic circuit with pump

Models: SBH / SLH

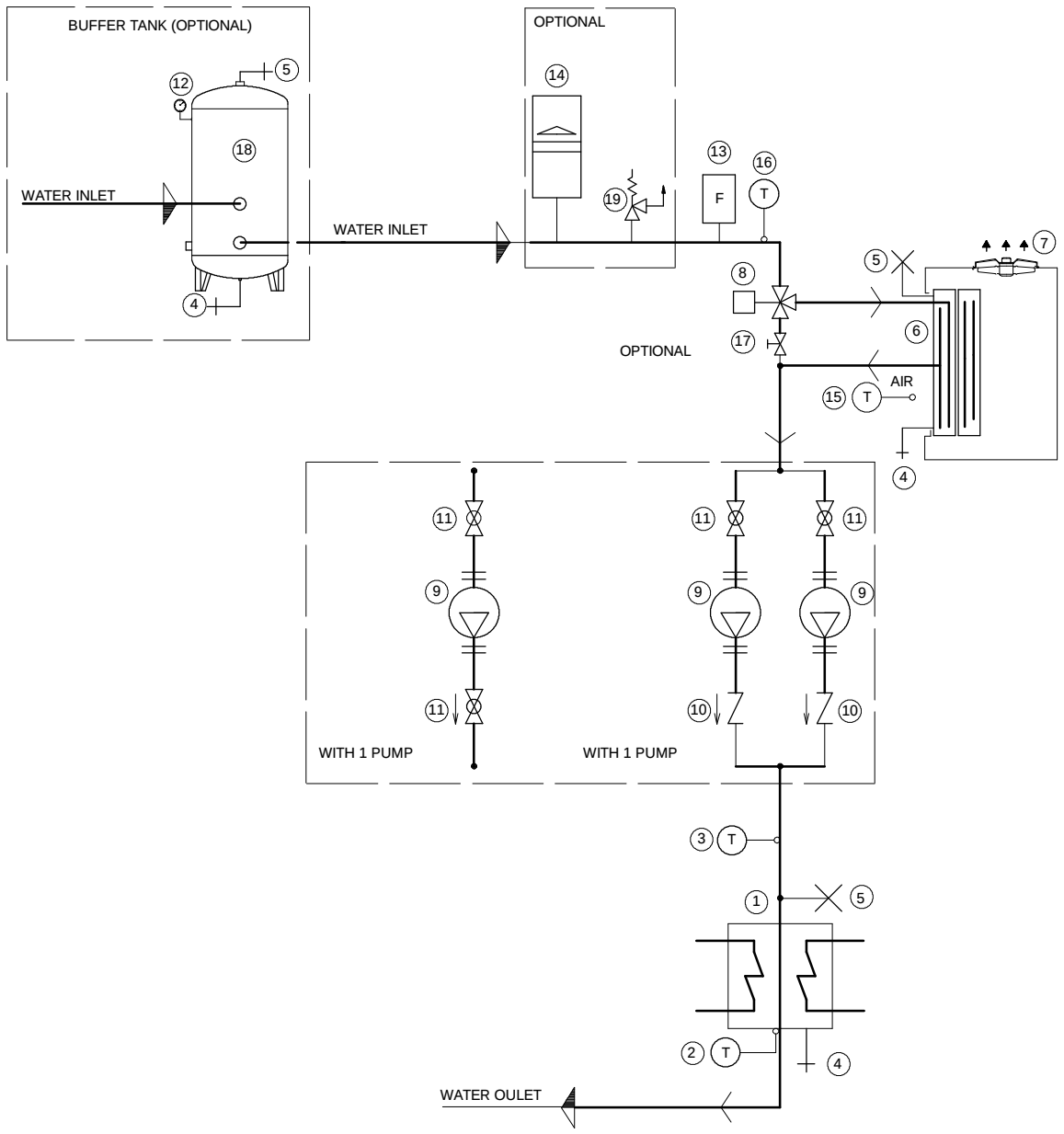

POS.	DESCRIPTION	POS.	DESCRIPTION
1	Evaporator	11	Ball valve
2	Antifreeze thermostat sensor	12	Pressure gauge
3	Service thermostat sensor	13	Flow switch
4	Discharge valve	14	Expansion tank
5	Manual air valve	15	Air temperature sensor
6	Freecooling coil	16	Control freecooling thermostat sensor
7	Fans	17	Gate valve
8	3–way valve	18	Storage tank
9	Pump	19	Safety valve
10	Non return valve		

Models: SBR / SLR

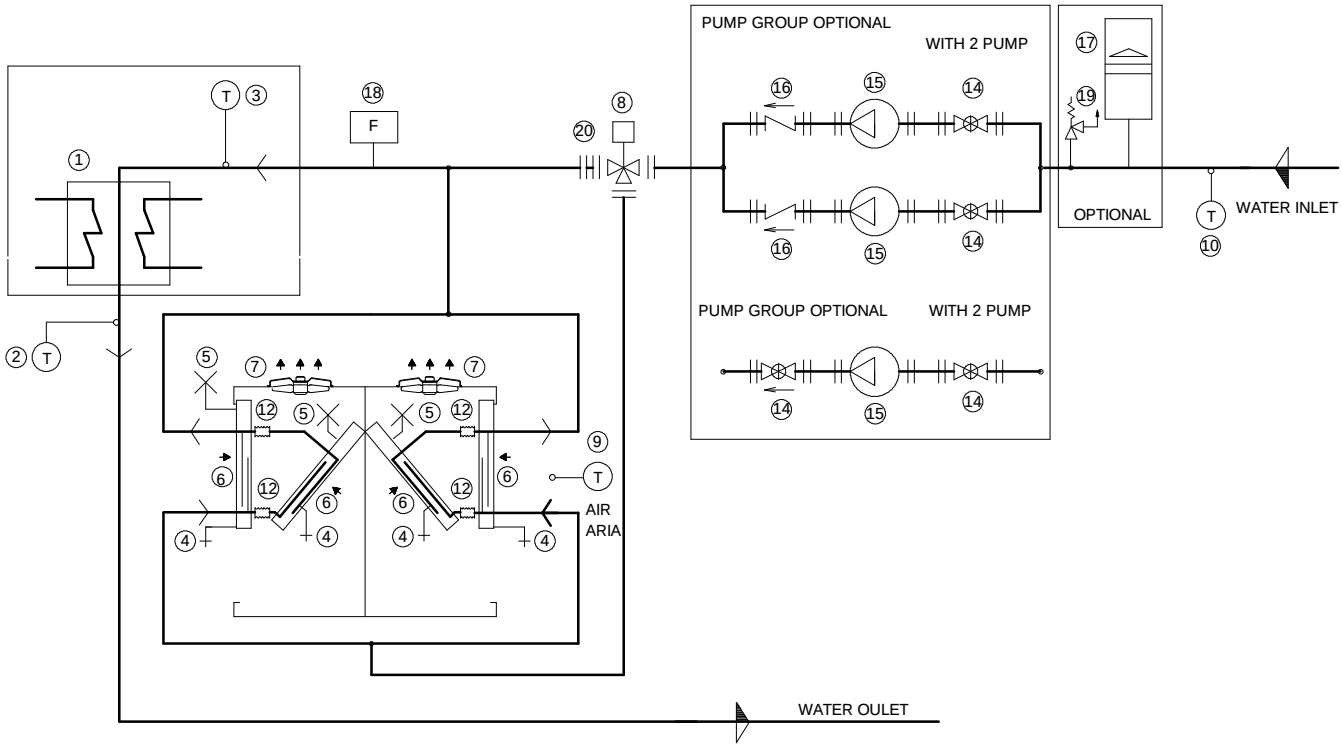

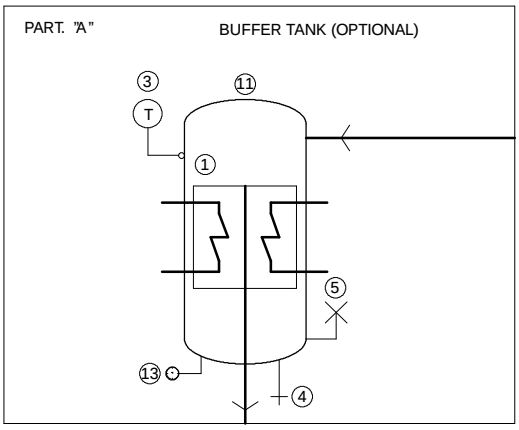

POS.	DESCRIPTION	POS.	DESCRIPTION
1	Evaporator	11	Storage tank
2	Antifreeze thermostat sensor	12	Flexible joint
3	Service thermostat sensor	13	Pressure gauge
4	Discharge valve	14	Ball valve
5	Manual air valve	15	Pump
6	Freecooling coil	16	Non return valve
7	Fans	17	Expansion tank
8	3–way valve	18	Flow switch
9	Air temperature sensor	19	Safety valve
10	Control freecooling thermostat sensor	20	Calibrate baffle

Il Fabbricante dichiara che questo prodotto è conforme alle direttive Europee:
The Manufacturer hereby declares that this product conforms to the European Union directives:
Der Hersteller erklärt hiermit, dass dieses Produkt den Anforderungen der Europäischen Richtlinien gerecht wird:
Le Fabricant déclare que ce produit est conforme aux directives Européennes:
El Fabricante declara que este producto es conforme a las directivas Europeas:
O Fabricante declara que este produto está em conformidade com as directivas Europeias:
Tillverkare försäkrar härmed att denna produkt överensstämmer med Europeiska Uniones direktiv:
De Fabrikant verklaart dat dit produkt conform de Europese richtlijnen is:
Vaimistaja vakuuttaa täten, että tämä tuote täyättää seuraavien EU-direktiivien vaatimukset:
Produsent erklærer herved at dette produktet er i samsvar med EU-direktiver:
Fabrikant erklærer herved, at dette produkt opfylder kravene i EU direktiverne:
Ο Κατασκευαστής δηλώνει ότι το παρόν προΪόν είναι κατασκευασμένο αύμφωνα με τις οδηγίες της Ε.Ε.:

98/37/CE; 89/336/CEE; 73/23/CEE; 97/23/EC

Zona Industriale Tognana
Via Leonardo da Vinci, 8
35028 Piove di Sacco (PD)
ITALY

Tel. +39 049 9719111
Telefax +39 049 5841257
Internet : www.hiross.it/pde

Liebert HIROSS is a division of EMERSON

Issued by T.D.Service
Printed in Italy by Liebert HIROSS S.p.A.