LENNOX®

APPLICATION GUIDE

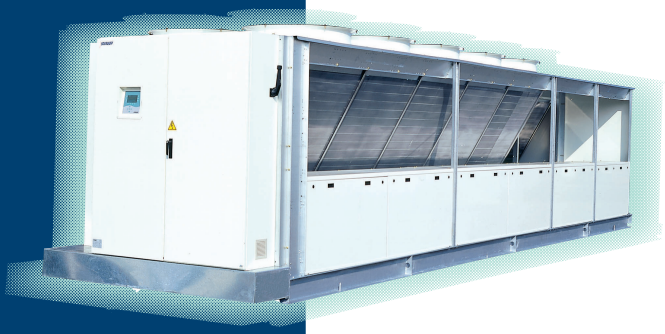

PROVIDING GLOBAL SYSTEM SOLUTIONS

EcoMax

CONTENTS

Our company is a member of the Eurovent Certification Programme. The ECOMAX™ Lennox chillers are tested and rated in accordance with Eurovent certification program.

Our products comply with the European standards.

The manufacturing ECOMAX™ family of chillers answers to ISO 9001 control quality system. A copy of the certificat can be get on request.

The specifications and technical characteristics in this booklet are given for information purposes. The manufacturer reserves the right to modify them without prior notice or obligation to modify in a similar manner, the equipments previously supplied.

LENNOX have been providing environnemental solutions since 1895, our range of air cooled Chillers continues to meet the standards that have made LENNOX a household name.

Flexible design solutions to meet YOUR needs and uncompromising attention to detail. Engineered to last, simple to maintain and Quality that comes as standard.

The Lennox ECOMAX™ range of Air-cooled Screw compressor chillers utilizes the very latest technology in Heat transfer and compressor design blended with the LENNOX Climatic II control system. This unique blend of technology and controls give a state of the art solution combining the reliability and performance that owners and operators demand today.

The ECOMAX™ range of LCH chillers utilizes ozone benign refrigerants and are specifically designed to take advantage of the characteristics of these refrigerants and lubricating oils.

Completely self-contained and designed for outdoor applications, each chiller is equipped with low noise, twin screw compressors that have a fully self-contained lubrication system managed within the compressor. This provides a simple and extremely reliable compressor system, compressor motors are cooled with suction gas and have a fail-safe liquid injection system to guarantee motor cooling under all conditions. Each compressor has its own independent refrigerant circuit and is matched to the evaporator and condenser for optimal performance. The condenser coils are arranged to provide full air circulation across the whole surface and avoid bypass by the integration of internal baffles. The condenser fans are multi blades aerofoil section with sickle end sections mounted in a bell mouth orifice to provide maximum airflow and low noise characteristics. The Condenser coils, compressors, high efficiency twin-screw compressors and the weatherproof power and control centre is mounted on a welded, fully galvanised, rigid base. All sheet metal panels are galvanized and external panels are powder painted RAL 9002 and baked for corrosion resistance.

The LENNOX ECOMAX™ range provides owners, specifiers and operators Reliability, Efficiency and unsurpassed Flexibility to specifically provide cooling solutions matching your needs.

The new ECOMAX™ range has individual versions for specific customer applications.
Each version has a range of 22 units from 300 to 1600kW The versions are Standard (Std) when cost per kW is the key driver. High ambient (HA) for operation in extremely high ambient conditions that exist in the Middle East and North Africa. High efficiency (HE) where operating costs and maximum operating efficiency is required and part load operating conditions are required. Low Noise (LN) this version of the ECOMAX™ range is recommended when noise emissions from the installation are an issue for the customers. With their flexible approach LENNOX is able to provide additional acoustical solutions to match customers' specific needs.

CONSTRUCTION

The chiller is constructed on a solid rugged base frame constructed of **sectional** beams welded together to form a ridged base. The base is structurally able to carry the unit weight and is torsionally ridged with no vibrating sections The base is **hot dipped galvanised for corrosion protection**. The chiller is lifted, moved and mounted via the base frame that contains AVM mounting and lifting points as standard. All sheet metal panels are galvanised and painted RAL 9002 to achieve a corrosion resistant attractive finish.

EVAPORATOR

The Evaporator is DX Shell and Tube type with independent refrigeration circuits. DX evaporators operating with HFC407C are well suited for air-cooled operation and are preferable to Flooded type evaporators. This combination offers lower refrigerant charges and independent refrigerant circuits significantly reducing risks of refrigerant loss. The shell is carbon steel trace heated with thermostatic protection to –20°C (option) and insulated with close cell foam (k=0.25). The tubes are copper with enhanced surface area mounted in a U bundle with brass internal baffle plates for maximum heat transfer performance. The evaporator is protected from freezing via the Climatic II control via both temperature and pressure monitoring. The evaporator connections are **flanged as standard**.

CONDENSER

The condenser is constructed with enhanced surface seamless copper tubes arranged in a staggered pattern mechanically expanded onto high efficiency corrosion resistant aluminium fins. The fins have full fin collars to enhance heat transfer. The fins are rippled but not lanced to provide a **surface that can be cleaned to maintain efficiency**. The condenser contains an integral sub-cooler circuit that increases the chiller performance with out additional costs.

ELECTRICAL CONTROL CENTER

The components of both power and control are split into two sections of one panel. Individual key locked doors access each section, which prevents unauthorised entry. The panel is manufactured IP55 to ensure protection in all weather conditions. Wiring is in compliance with EN60204-1
The electrical system is designed to be **plug and play** as a customer needs only to connect a power supply to enable the unit to operate all the necessary controls and safety devices are already installed. The panel has a (optional) internal thermostatically controlled ventilation system to maintain ideal operating conditions.
Power section contains contactors, **thermal overloads for compressors and fans**, phase protection, mains isolation and customer connection points. All 3-phase connections are fully shrouded to prevent any accidental contact.
Control is via the **Climatic II** controller that provides full control of the chiller and refrigeration system. All the safety and scheduling of the refrigeration system, compressors and condenser fans. Control of the chilled water system to provide the design off water temperature at the maximum efficiency by matching the system load, ambient and operating conditions at the minimum power consumption.
The Climatic II has a full digital display with trend logging, reading 2050 points of data. Display of all system conditions on a single screen. Alarm signalling and display. Diagnostics by individual refrigerant circuit. Full PID control of chilled water and electronic TEV per circuit with adaptive control logic. Hours run and automatic compressor scheduling. High pressure and low pressure adaptive control to prevent nuisance trips. Antifreeze protection, remote control options. Options can be added to enhance the level of control and external communication capabilities.

"HUSH TONE" CONDENSER FAN

The new Hush tone condenser fan features six aerofoil pitched blades statically and dynamically balanced. The blades have sickle end section in a bell mouth orifice for reduced noise and improved performance. This fan design is unique to ***LENNOX*** . The fans are direct driven via a three phase motor with permanently lubricated ball bearings. The motors are designed for external operation and are available with different speeds with the option of two-speed motor.

COMPRESSORS

The compressors are ***LENNOX*** compressors built by Bitzer. These set new standards for technology and performance. Bitzer has a long history of manufacturing screw compressors for the refrigeration market. The new compact design features a semi hermetic twin screw compressor with integral 3 stage oil separation. Robust long life axial bearings with pressure balance ensure long bearing life. High energy efficient compressor operation is enabled by reducing the tip

clearance between the male and female rotors. Double wall pressure compensated compressor housing to provide low noise operation. Large volume motor for part winding start with phase protection, thermal motor protection and discharge gas temperature protection features as standard. Fully unloaded start with 4 stages of capacity control.
The compressor is fitted with a suction gas screen and a fully serviceable oil filter.
Lubrication system is completely self contained within the compressor, no external oil separator or oil cooler is required. The low speed operation of the compressor, together with the superior oil management ensure that the compressor performance is maintained and the compressor requires only periodic service every 3 to 5 years. The low rotating speed, double wall compressor housing, internal oil separator and discharge gas muffling all contribute to the lowest ever sound levels on Lennox helical rotary compressor systems.

PART WIND STARTING V STAR DELTA .
You can see that the use of part winding compared to open transition star delta offers an overall reduction in starting current. In part winding the introduction of the second stage

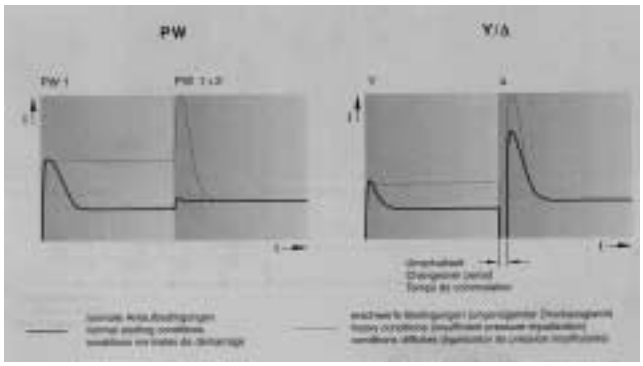

of the motor winding takes place without stopping the motor. On star delta the motor electrical supply is stopped and as a result there is a significant peak in inrush current in delta at that time. On star delta the initial inrush current is smaller than part winding initial inrush.
Customers should make sure this is understood as some companies refer only to initial inrush current and not the overall starting current in their literature. To match the characteristics of the well-matched part wind start a closed transition star delta system is required.

Factory Testing

Factory testing of all the EcoMax range means trouble free start ups.
Each individual refrigerant circuit is pressure tested, evacuated and vacuum tested before being charged with refrigerant and oil. The system is then subject to a complete functional test via the Climatic controller that is self diagnostic on all its external sensors. The unit is then placed on the test stand and given a operational run test to ensure that the unit is fully functional and operating correctly before leaving the factory. This detailed testing ensures that the Climatic II has the correct operating parameters, communication and control sequence are installed. All the electrical wiring and connections are checked, condenser fans and compressors are operated and checked. The refrigeration system operation is checked for the correct refrigerant charge, setting of the expansion valves and the operation of the safety and protection devices are fully functional. Each and every EcoMax unit spends a minimum of four hours in the test stand. All options that are factory fitted are tested to ensure that they operate correctly and any customer external connections such as flow switch or remote on/off are simulated
After testing and recording the operation the unit is then given a final refrigerant leak test before passing for cleaning and finishing. All the external components are given a final coat of a clear epoxy coating to help maintain the appearance and corrosion resistance of the complete chiller.

Standard

The ECOMAX™ Standard range of Air cooled helical rotary screw chillers from LENNOX offer specifiers, owners and operators performance and reliability in a compact package. The standard range is fitted with 2,3 or 4 high performance, robust, Lennox screw compressors each in its own independent refrigeration circuit. Each refrigerant circuit has a dedicated condenser section and fans. The Lennox "*Hushtone*" fan is fitted as the standard and operates at 700rpm. Each refrigerant circuit contains an oversized filter drier, a mechanical liquid line stop valve with a charging port, liquid line solenoid valve, thermal expansion valve, liquid sight glass and discharge check valve. The single DX evaporator has 2,3 or 4 refrigerant circuits and is fully insulated 13mm with close cell foam insulation sealed to form a vapour tight seal on the evaporator shell. The evaporator is fitted with vent and drain points and is supplied with flanged water connections, the flow and return water sensor pockets are mounted in the pipe stub sections.
The control and power sections are mounted in a single weatherproof compartment, all the compressor and condenser fan power supplies are individually fitted with thermal overloads. The three phase power and earth connections are via a low level gland plate and connect to a fused thermal overload ensuring complete discrimination. A control transformer supplies the antifreezer and control single phase supply. The advanced Climatic II microprocessor controller fitted with the KP02 digital display customer interface is supplied as standard on these units. The KP02 customer interface is removable so that access to the control system can be totally controlled allowing only authorised access to the system configuration.
All the chiller components are mounted to sectional welded steel channel base frame that has been hot dipped galvanized for corrosion protection. The base has the lifting lugs and mounting points for anti-vibration fittings all pre-installed. The ECOMAX™ range is built in accordance with current EEC norms and legislative requirements.
The ECOMAX™ standard range has a large number of customer configurable options to meet the local legislative requirements and specific customer needs.

Low Noise

The ECOMAX™ Low Noise range of units uses the same range of Quality components that are utilized in the Standard range previously detailed. In addition the Low Noise range uses larger condenser surface with low speed fans to achieve similar capacity range as the Standard units. The already low noise helical rotary compressors are installed in an acoustical sheet metal enclosure, which is lined with sound attenuating material. Compartment in covered with sound-insulated foam: PAE 28 mm, 3 kg/m2 mass, protection films, fire classification M1.
This combination significantly reduces the sound power from the chiller. The utilisation of low speed rotary compressors and the management of the oil system within the compressor, combined with the acoustic compressor treatment results in an extremely low emitted sound level radiated from the chiller. The ECOMAX™ Low Noise range is supplied with both low speed fans and the compressor acoustic enclosure as the standard.
The addition of condenser surface area means there is no compromise in performance when selecting a ECOMAX™ Low Noise chiller. These units are built and factory tested to the same demanding quality standards that the Lennox brand is renown for.

High Efficiency

The ECOMAX™ high efficiency range of units is designed to ensure that cooling both at full and part load is provided at the minimum electrical power absorbed. This provides the owner with the lowest operating costs and by reducing power consumption the indirect global warming impact is minimised. The indirect global warming is the generation of CO_2 in producing the electrical power to operate the chiller by selecting from ECOMAX™ high efficiency range CO_2 production is minimised.
When selecting a ECOMAX™ high efficiency unit the additional costs associated with the additional components required can be recovered in the first few years of operation. A Lennox ECOMAX™ unit has a life expectancy of over 15 years so after the initial capital difference is recovered in the first few years the continued cost savings can be utilised for other purposes.
The ECOMAX™ high efficiency range uses oversized heat exchanger surfaces and condenser to get the highest efficiencies. The Climatic II controller is supplied with KP02. The unit is fitted with the very latest in Electronic expansion valve technology that is controlled by the Climatic II and uses Lennox unique control algorithms to operate the compressors, condenser fans and expansion valve to provide the best operating efficiency at all operating conditions. The Climatic II controller is looking at 2050 different operating parameters every minute and making adjustments to ensure the efficient and safe operation of the chiller. Compressors have Economisers fitted to help improve the overall refrigeration cycle efficiency.
The ECOMAX™ uses the same range of components as the ECOMAX™ Standard range of chillers and is also fully factory tested to ensure trouble free start up.

High Ambient

The ECOMAX™ high ambient range of chillers is engineered to operate at the high ambient conditions in the Middle East and North Africa. The high ambient units can also be utilized when the application or positioning of the chillers result in the chiller being exposed to high condenser supply air temperatures. The ECOMAX™ high ambient range utilises the same components as the ECOMAX™ standard range. Additional condenser coil surface is used together with 950rpm condenser fans are used to enhance performance for high ambient operation. The use of rotary screw chillers with suction gas cooled motors with liquid injection guarantees long motor life in high ambient conditions. The rotary screw compressors have low vibration and noise levels and require very little service throughout the compressor lifetime. Lubrication system is completely self-contained within the compressor, no external oil separator or oil cooler is required. The low speed operation of the compressor, together with the superior oil management, ensure that the compressor performance is maintained and the compressor requires only periodic service every 3 to 5 years The Climatic II controller is supplied as standard with the KP02 controller. The power and control panel is ventilated via a thermostatically controlled IP55 ventilation fan. This helps prevent electrical components from over heating. The Condenser coil is easily cleanable so that sand and debris can be washed away. The combination of Climatic II and the Expansion valve technology allows the chillers to start under high ambient conditions (52°C) and high chilled water temperatures are an important feature for high ambient operation. The full range is able to operate at full load conditions with standard chilled water temperatures in ambient as high as 50°C. Additional options such as sunshades are available for ECOMAX™ high ambient range. The high ambient range is subject to the same demanding quality and factory testing requirements as the rest of the ECOMAX™ range.

ECOMAX™ Standard options details

Anticorrosion treatment condensers coils

This is an anticorrosion coating that offers additional protection to the condenser fins for salt laden atmospheres such as seashores and in areas of industrial pollution.

This is not suitable for heavy industrial pollution, strong alkalis, oxidizers, wet bromine and chlorine and fluorine in heavy concentrations

Industrial anticorrosion treatment

This anticorrosion coating is suitable for areas of high industrial pollution. This is not suitable for heavy industrial pollution, strong alkalis, oxidizers, wet bromine and chlorine and fluorine in heavy concentrations.

Epoxy Coated Condenser fins

Condenser coils constructed with epoxy coated aluminium condenser fin stock for corrosion protection resistance comparable to Cu/Cu coils in salt laden conditions. The pre-coated fins are assembled onto copper tubes with full form collars to enhance heat transfer and reduce corrosion.

Cu / Cu Condenser coils

The condenser is constructed with copper fins and copper tubes for resistance to most industrial and heavy salt laden conditions. This is not advised for use areas exposed to acid rain

This option adds weight to the unit and care should be taken when selecting the correct unit weights and point loads to ensure this is allowed for.

HP/LP gauge set

Liquid filled gauges that measure the evaporating Low pressure (LP) and condensing high pressure (HP) on each refrigerant circuit. Gauges are mounted locally and at each compressor the gauges are compound gauges that display the saturated refrigerant temperature for various refrigerants Available. Gauges are color coded for easy reference Blue is LP and red is HP. The same information is available on the Climatic II controller. Be careful not to duplicate functions and add unnecessary costs to a unit. If a specification asks for display of High and low pressure then this is available from the Climatic II controller and it is not necessary to add gauges. Competitors will add gauges that are not glycerine filled and these quickly fail due to gas pulsation.

When driving the specification make sure liquid the customer specifies filled gauges.

Dual pressure Relief valves

Refrigerant pressure relief valves are fitted on both the HP and LP sides of the refrigeration system. This option has twin valves connected on a common HP or LP header with an isolation valve. This allows one valve to be on line at all times while the remaining valve is serviced, replaced or calibrated

Adjustable HP Pressure manual Cut out

In addition to the High pressure cut out that is fitted as part of the standard control system this option adds an additional mechanical high pressure switch that has an adjustable operating point.

This option is factory fitting of the mechanical high pressure switch, interconnecting wiring and factory testing of the operation.

The set point will be set above the Electronic cut out point but below the HP pressure relief set point.

Care should be taken if making adjustments in the field that the limits of the unit are not exceeded or that the HP trip point is higher than the relief valve set point.

Condenser coil Guards

Removable polyester coated metal guards protect the entire condenser coil outer surface from accidental damage. They also prevent direct access to the unit components. The coil guards are removable for service and cleaning.

Service Panels to close compressor enclosure

Galvanized sheet steel panels painted with Epoxy paint RAL9002 are supplied to close off the Compressor enclosure. This presents a clean aspect to the chiller, prevents unauthorized access to the compressors and helps reduce the overall sound level. Panels are designed to be easily removable and are sized to be removed and installed by one person.

Anti-intrusion grills

When a unit is installed in an area that is not secure then it is recommended that anti intrusion grills be fitted. These enclose the lower section and the right section on the compressor side of the unit to inhibit access to the components. These are only deterrents and will not provide total security.

Mains Transformer

Avoids the separated power supply 230V/1/50Hz for the compressor crankcase heaters and the option antifreeze heater on evaporator. This enables the customer to make just one power connection at the main switch the remaining power to the control circuit and heaters is provided by the transformer. The mains transformer comes fully wired and tested this option can reduce customer's installation costs and does not require a customers' to use a neutral cable.

R22

The units are supplied with HFC407C, as standard the option is to have HCFC22 as the refrigerant. This is only available as an option outside of the EEC.

When specified with R22 the unit is supplied with operational set points and components that are suitable for operation with the refrigerant.

Control panel Anti-condensation heaters

This option provides for heaters mounted inside the control panel to drive off moisture from condensing on the electrical components inside the panel. The package includes a thermostat to operate the heaters if the ambient falls below the set condition. This option is recommended when low ambient operation is anticipated.

Plexy Glass inside the control panel

Allows observation of the electrical operation of the controls under live conditions without risk of any accidental contact.

Main ON/OFF switch

This allows the general cut-off and isolation of the main 3 phase power supply, when the machine is running or stopped. If the mains transformer is fitted this switch will also cut power from the control and antifreeze Heaters. CAUTION If the mains switch is in the OFF position and a separate power supply is NOT provided to the antifreeze heaters Freezing can occur.
The mains switch is supplied with covers on the connections. The mains switch is used to isolated power from the unit for safe working on the electrical system.

Door interlocked Mains switch

This allows the general cut-off and isolation of the main 3 phase power supply, when the machine is running or stopped. The main switch is interlocked so that the panel cannot be opened until the power has been turned off. This ensures that the unit cannot be accessed until power has been isolated. If the mains transformer is fitted this switch will also cut power from the control and antifreeze Heaters. CAUTION If the mains switch is in the OFF position and a separate power supply is NOT provided to the antifreeze heaters Freezing can occur.
The mains switch is supplied with covers on the connections. The mains switch is used to isolated power from the unit for safe working on the electrical components.

Flow switch

2 different types of flow switch are available: - differential or a paddle flow switch.
In case a differential flow switch has been selected, it is necessary to propose the option "antifreeze heater on flow switch" for operating at temperatures lower than 0°C. This switch comes piped and fitted on the evaporator and is tested by the factory.
The paddle switch is supplied loose for fitting in the CHILLED water off line by the customer. It is also required that the customer wire the flow switch directly back to the control panel terminals provided.
If a chiller is operated without a flow switch then Freezing of the evaporator will occur if the chiller is operated with no water flow. Warranty will be voided if no flow switch is present in the chilled water system

TUV/VDE

Units manufacturing according to the TÜV/VDE norm (electrical components, pressure devices, safety valves...).

STEK

Units delivered to meet the requirements of STEK regulations. This includes documentation and certification in addition to the mechanical and testing modifications required.

All seasons operating (-20°C) (Low Ambient)

Allows start-up and operating of the unit up to outside temperature down to -20°C (recommended for outside temperatures below +6°C). The unit is generally equipped with a low pressure switch and an antifreeze thermostatic function. This option includes the antifreeze protection for the evaporator.

Reinforced evaporator insulation

Oversized thermal insulation of the evaporator increases the insulation from12.7mm to 26mm closed cell foam that is resistant to water. Classification for fire : M1.

Inlet/outlet alcohol thermometers

Measures the water inlet and outlet temperature (supplied loose for fitting by others)

Simple water gauge

Water gauge, which measures the pressure on the inlet and outlet of the water circuits.

Alarm signaling relay

Dry contact relay allowing the remote alarm of compressor or circuit default .CLIMATIC standard : general default. There is one alarm per circuit.

Antifreeze protection for the evaporator

Resistance heating tape is wrapped around the evaporator barrel to help protect the evaporator from freezing down to -20°C. Controlled by a thermostat mounted in the main panel.

Note this requires an electrical supply during winter operation. If mains switch is off then there is no supply to the anti freeze heater. A separate supply is recommended under these circumstances. This device will not protect external water pipework connected to the unit and additional frost protection measures are required

KP07 Graphic Display

The KP07 Climatic II graphic display replaces the KP02 and gives a full LCD display and keyboard for customer interface. This offers additional functionality and control features that are not on the KP02 (see separate specification sheet)

KP07 Visual Display Unit

Compressor Suction Valve

Refrigerant isolation / stop valve. Fitted on each refrigerant circuit. This will allow the compressor to pump down the refrigerant charge into the condenser and allow the compressor to be isolated from the system for maintenance work.

Embellished posts

This is a kit that greatly improves the appearance of the chiller. It consists of sheet metal fill and corner pieces so that the chiller has a smooth appearance with rounded corners. The chiller appearance is with more painted sections and looks very well finished.

Water Strainer filter

Strainer filter to be installed upstream to the water inlet, to protect the evaporator from any possible impurities . Recommended for shell and tube.

Anti-vibration mounts

Elastic supports made of 2 flat and parallel frames, connected together via a rubber ring, fixed under the unit at the points specified by our technical drawings. Reduces the transmission of vibration to the ground and the general sound level. The diameter and strength vary in accordance with the model. Delivered not fitted. This type of mounts is not adapted to concrete slabs.

Spring Anti-vibration mountings

Spring and cage type isolators with a 30mm deflection for mounting under the unit. Recommended for rooftop installations and any vibration sensitive applications. Deflection and level is site adjustable and deflection may vary according to unit size. AVMs are coded and the correct AVM should be positioned in accordance with the IOM data.

Power Factor Correction

Power factor correction is available to 0.95 contact customer service for details.

Use of these guidelines will ensure that Lennox products are given the opportunity to operate for their intended purpose and within their design operating envelope. Installing and operating the equipment differently than described herein may affect the warranty as administered by Lennox or their approved agents.

It is naturally expected that good engineering practice will prevail on any project. Failure to address any particular aspect of system design in this manual does not imply that the subject is not important.

Chilled Water Systems

LENNOX recommends that chilled water piping for its chillers be designed and installed in conformance to the system recommendations described in (American Society of Heating Refrigeration and Air-Conditioning Engineers, mc.) ASHRAE Handbooks. Specifically the 1996 Edition, HVAC Systems & Equipment, Chapter 12.

Multiple Units

Chillers are frequently installed in multiple. Doing so provides standby reliability and improved performance, and is recommended. Multiplicity of machines however can result in unexpected problems where chiller controls or capacity reduction are overlooked in the design. Single chiller installations are equally susceptible to application oversight. The following offers supplemental information to that discussed in ASHRAE for the purpose of minimizing installation problems.

Water Flow

Chilled water systems are normally designed with leaving chilled water temperatures of 5.5°C to 8°C (42°F to 46°F),a 5°C (10 degree F) water temperature difference and 0.044m2K/kW fouling factor. Catalog performance tables display data for the chillers at these conditions. Actual design may be different, and Product Manuals include adjustment factors or special rating tables to account for other conditions.

1.Addition of secondary coolants such as ethylene glycol.

2.Variances from 6°C (10°F) water temperature differences.

3.More than standard water fouling.

4.Elevation and ambient air temperatures (on Air Cooled Condenser Units).

Specifications and start-up procedures should:

1.Confirm that the chilled water piping system had been properly flushed out before being connected to the chiller vessel.

2.Confirm that the piping contains.

a) A cleanable strainer to remove impurities before they reach the chiller vessel.

b) An expansion tank in the piping.

c) An air vent located at the system high point to purge trapped air in the piping system. An air vent is also located at the top of the direct expansion chiller vessel and in the waterhead of a flooded vessel evaporator or condenser.

Note: The evaporator may not be the high point in the system as far as venting is concerned.

All water systems include air in solution with the water. The percentage of air that can be retained in solution is a function of the water temperature and water pressure. Since these two values change in both chilled and hot water systems, the presence of both b and c components listed above are vital to the successful operation of the system.

the disconnect switch should be clearly marked to avoid accidental deactivation of the heater during freezing temperatures. The heater will provide freeze protection to -29°C (-20°F). However, this does not provide protection to the exposed chilled water piping. Unless the evaporator is flushed and drained, two or more of the following recommendations should be part of the system design and be implemented.

1.Continuous circulation of water through the piping and heat exchanger.

2.Addition of the required concentration of a glycol anti-freeze to the circuit. This will result in decreased capacity and increased pressure drop. Note: do not use automotive grade antifreezes that contain inhibitors harmful to chilled water systems. Only use glycols specifically designated for use in building cooling systems.

3.Addition of insulation and heat to any exposed piping and equipment.

4.Draining and flushing the chiller with glycol

Variable Speed Pumping

LENNOX believes that the correct application of a Variable Frequency Drive (VFD) pumping system should be carefully evaluated. It is important that VFD operation be harmonized with the operation of the other components that make up an HVAC system.

The proper operation of a VFD chilled water pump requires that the pump upper and lower flow rate limits match the

Figure 1, Typical Chilled Water Piping

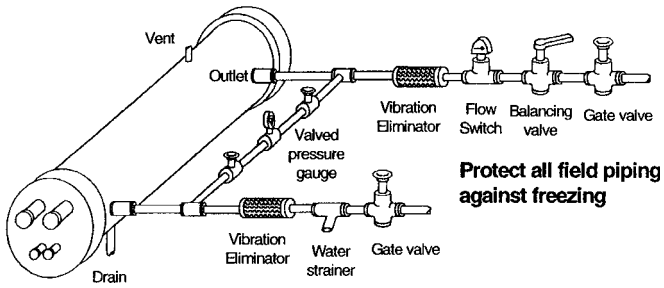

maximum and minimum flow rate permissible for the evaporator. A flow rate above the maximum permissible level can result in erosion of the tube plate or oscillation of the tube bundle, both resulting in failure of the evaporator. Higher than permissible flow cause noise and a high water pressure drop across the evaporator.

A flow rate below the minimum permissible level results in poor heat exchanger performance due to laminar flow in the evaporator waterside. Turbulent flow is needed for good heat exchanger performance in modern evaporators. Flow rates below the minimum level also result in poor chilled water control, hunting of the thermal expansion valve and liquid refrigerant being carried back to the compressor, causing failure. Low flow rates also lead to accelerate tube fouling as sediment in suspension in the water falls out.

Chilled Water Systems

The refrigeration system is an independent thermodynamic cycle that is primarily controlled by the volume of refrigerant being pumped by the compressor, which in turn is a function

of the rate of heat exchange in the evaporator. The leaving chilled water temperature controls the amount of refrigerant pumped by the compressor. The difference between chilled water entering and leaving is a function of the flow rate of water and the chiller capacity. The use of Variable Frequency Drive (VFD) pumps to vary the chilled water flow rate has a significant impact on both the chiller control system and the thermodynamic performance of the chiller. A chiller is selected to provide a specified capacity with a given set of conditions including flow rate. The chiller is factory tested and started in the field with those design criteria.

The refrigeration system will have been set; refrigerant charge, expansion valve, and control algorithms, all based on a fixed water flow rate. Varying this flow rate with a VFD pump can have disastrous effects if the system is not set up correctly.

Large change steps in VFD systems do not allow adequate time for these changes to take place. This results in nuisance trips, inefficient operation and premature compressor failure.

The expansion valve should be tested at the minimum flow condition to ensure that the correct suction superheat can be maintained. This will require additional set up time for start up which will need to be included in the project costing. Under the low load, low water flow rate there is a high probability of slugging liquid refrigerant back to the compressor, which in extreme cases can result in compressor failure.

Multiple Chillers

A potential problem to be avoided is bypassing chilled water when chillers are connected in parallel. If a single VFD chilled water pump is being used, when one chiller is off the chilled water will still pass through both chillers resulting in a mixed condition of the supply chilled water. This means the chilled water going to the process or HVAC load is not at design set point.

Another consideration on chilled water VFD systems with a primary/ secondary system and bypass is not sizing the bypass large enough to allow sufficient water volume to prevent the chiller from cycling on and off rapidly. This will lead to premature compressor failure. It is important that the primary loop and the by-pass are correctly sized to accommodate the minimum water volume required to avoid frequent compressor cycling.

Lennox does not recommend the use of variable water flow systems on chillers that are controlled by entering water temperature. This is due to the instability of the chilled water outlet temperature and the risk of freezing in the evaporator.

Roof top Installations

Units should be installed on a steel channel or I-beam support above the roof. Accessibility and serviceability of equipment should be a major consideration. Typically, level should be within 1,5 mm per 30 cm along the unit length and width. Spring anti-vibration mountings are recommended with a minimum of 25mm deflection when loaded.

Ground Level Installations

It is recommended that units be installed on a one piece concrete slab with footings extending below the frost line. Level to the same recommended specifications as roof top mounting. Lennox recommend that the chiller be mounted on spring or rubber ant vibration mountings and not be directly rested on the concrete slab.

Prevailing Winds

Prevailing winds should be considered if the unit will be operating in lower than 5°C (42°F) ambient air temperatures. Options to consider where winds are of concern are head pressure controls, wind deflectors, and hail guards. A rule of thumb guide is that whenever the wind can blow directly against vertical coils without deflection, preventive action is required. When possible, position the unit so prevailing winds blow against the ends of the unit. Units having vertical coil surfaces are affected to a greater degree by winds than horizontal coils.

Cold air temperatures below 15°C together with steady or gusting winds in excess of 8 Km/h will result in low refrigerant condensing temperatures. This further results in low refrigerant suction temperatures and pressures and nuisance tripping on unit protective controls. Low ambient all seasons option should be included in the chiller specification. Wind baffles or deflectors such as walls or screens should be considered in the design of the chiller enclosure.

Snow Considerations

Air-cooled units should be elevated to assure unrestricted airflow to condenser coils following severe snowfall conditions. If the chiller units are elevated to provide this clearance, a steel or otherwise reinforced grate must be provided to permit complete component maintenance and service. This should include guardrails and adequate lighting to permit safe access.

Low Ambient Operation

The standard Climatic controller will cycle condenser fans to maintain adequate discharge pressure down to 5°C (42°F). Ambient operating conditions less than 5°C (42°F) will require specifying the optional Low ambient head pressure control. All seasons option will modulate fan speed and control discharge pressure down to -20°C (0°F) with no direct wind on the coils.

Clearances

Air-cooled units require free airflow to and from the condenser coils. Units should be installed per the listed installation clearances. There should be no obstructions above the fan discharge that may cause air recirculation. Air restriction and recirculation may cause high pressure trips and will reduce capacity, efficiency, and compressor life. Do not install ductwork on condenser fans. Structures, other equipment, fencing, plants, and trees must be considered for airflow interference. Ventilators, and any sources of contaminated or

heated discharges, gases and air will affect system performance. Pit type installation should meet Lennox requirements. Minimum individual chiller clearances are detailed on the unit dimensional drawings. However multiple chillers, chiller enclosures, walls and pits all can impact on the overall performance of the chiller and need careful consideration.

Service Access

Each end of the unit must be accessible after installation for periodic service work. Compressors, filter-driers, and manual liquid line shutoff valves must be accessible on each side of the unit adjacent to the control box. High pressure and low pressure transducers are mounted close to the compressor. Compressor power connections, overloads, Climatic microprocessor control, and most other operational, safety and starting controls are located in power and control panel mounted at one end of the unit. There should be a minimum of 600mm between the control panel doors in the fully open position and any obstruction.

The electric disconnect switch should be mounted adjacent to the unit but not directly on unit sheet metal components. For most EEC countries a door interlocked mains isolator is required and is a standard Lennox option.

The EcoMax range of chillers allows for mains cable connection via a gland plate mounted at the base of the control panel.

On all Lennox air cooled chillers the condenser fans and motors can be removed from the top of the unit. The complete fan/motor assembly can be removed for service. The fan blade and fan motor rain shield must be removed for access to wiring terminals at the top of the motor.

Minimum clearance requirement drawings on the following pages should be consulted for equipment space layout.

FOUNDATION

The unit must be set on a flat and level foundation. On ground level installations, the unit should be mounted on a single piece concrete slab and not tied to the building structure. Footings should extend below the frost line.

Rooftop installations require adequate structural beams to support the weight of the unit and service personnel. The design of the beams/supports must minimize deflection and attendant vibration transmission. Also, for sound sensitive applications, unit vibration isolators should be used.

SPACE AND LOCATION REQUIREMENTS

The location of the air cooled chiller must provide for a sufficient supply of ambient air to the condenser and adequate removal of heated air from the condensing unit or remote condenser area. Inadequate air circulation will result in higher head pressures which will cause poor operation and potential failure of equipment. Units must not be located in the vicinity of steam, hot air or fume exhausts. Corrosive atmospheres require custom designed condensers.

Units should be mounted away from noise sensitive spaces whenever possible and must have adequate support to avoid vibration and noise transmission into the building. Units should be mounted over corridors, utility areas, restrooms and other auxiliary areas where elevated levels of sound are not an important factor. Sound and structural consultants should be retained for recommendations.

CLEARANCE

Always provide sufficient clearance room for unit maintenance and service. Minimum clearances are listed in the dimensional data section.
Additional clearance considerations are detailed below :

Vertical Clearance :

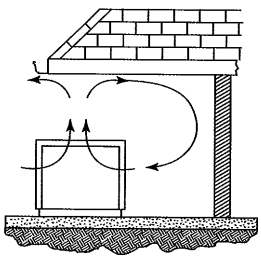

Overhead obstructions are not permitted. Vertical air discharge from the condenser must have no obstructions which can cause the discharge air to be recirculated back to the inlet side of the unit. Recirculation will adversely affect the performance of the unit.

Lateral Clearance (Walls or Obstructions) :

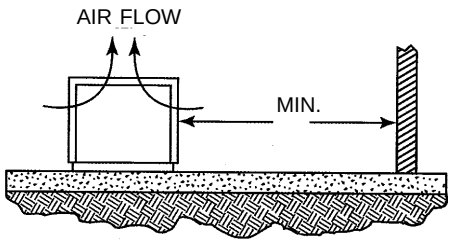

The unit should be located so that air may circulate freely and not be recirculated. For proper air flow and access all sides of the unit should be a minimum of 1.5 meters away from any wall or obstruction. It is preferred that this distance be increased whenever possible. Care should be taken to see that ample room is left for maintenance work through access doors and panels. When the unit is in an area where it is enclosed by three walls the unit must be installed under the guidelines for unit installation in pits.

Decorative Fences :

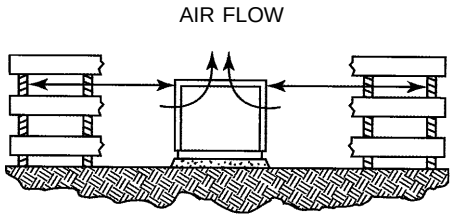

Fences may be installed closer than the 1.5 meter lateral minimum requirement whenever fences permit sufficient free area to allow adequate air flow to the unit. Once again, care should be taken to leave ample room for unit service. Recommended service clearances are listed in the dimensional data section of this Application Guide.

Units in Pits :

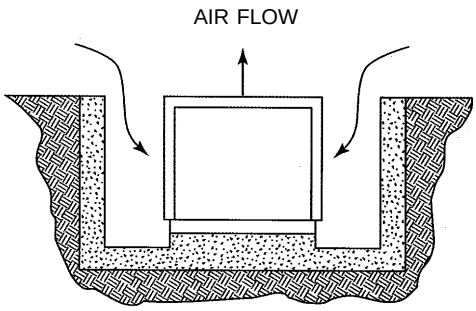

The top of the unit should be level with the top of the pit. If the top of the unit is not level wiht the top of the pit, a wider pit or discharge stacks must be used to raise discharge air to the top of the pit. This is a miniumum requirement. These applicaitons should be reviews by and Application engineer.For proper air flow and access all sides of the unit should be a minimum of 1.5 meters away from any wall or obstruction.

Multiple Units (Unit-to-Unit Clearance) :

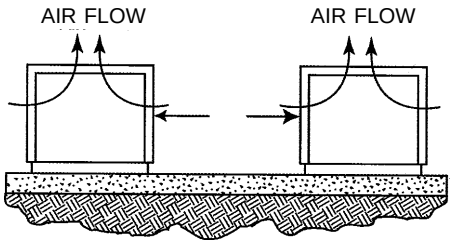

For units placed side by side, the minimum distance between units is 3 meters to prevent air recirculation.

ALTITUDE CORRECTION FACTORS

All Lennox Ecologic™ Chiller performance data is calculated at sea level. Higher altitudes result in decreased air density. This will have a negative effect on the heat transfer capabilities of the condenser which will reduce the overall system performance. Performance correction factors are found on Page 20 with the Unit Selection Procedure. These factors can be applied to the rated performance to determine system capacity.

AMBIENT RESTRICTIONS

Lennox Ecologic™ Chillers offer year-round operations under a wide variety of ambient conditions. Standard equipment allows for operation in an ambient range from 0 °C through 43 °C. Optional low ambient controls allow for operation down to -29 °C. Low temperature application performance can be determined by referring to Page 20 (Glycol Applications). Options for operation at high ambient temperatures are also available. Consult an Application Engineer for higher or lower ambient conditions.

COOLER FREEZE PROTECTION

The cooler heater cable is designed to protect the cooler to -29°C ambient. However, there is no freeze protection in the event of a power failure or a heater cable failure.
Therefore, one of the following additional measures will provide added protection : add the appropriate percentage of ethylene glycol and/or drain the cooler and piping if the chiller is not operated during the winter months.

CLIMATIC Controls

All the ECOMAX™ range of air cooled screw chillers are fitted with the Lennox Climatic II microprocessor control system. This is supplied LED customer interface. KP07 LED graphic display customer interface is an option on the units fitted with the KP02 customer interface

There is no difference in the capability and control functions between the Climatic fitted with the KP02 or KP07 customer interface the difference is in the way information is displayed.

The Climatic control system has many unique and useful features.

The chilled water control The Climatic turns the compressors On and Off based on return water temperature but it controls the loading capacity of the compressors that have been turned on based on return chilled water condition. This insures that enough compressors are activated to handle the cooling load and that the leaving chilled water temperature is maintained at its design set point. Additional features allow programming of different values for loading and unloading points and predictive analysis to avoid overshooting of the chilled water set point.

Climatic II +KP02 Digital display

When bidding in the competitive contractor market the option of the KP02 digital console offers a cost reduction but still retains most of the Climatic control features. The KP02 has the unique advantage that it can be disconnected from the controller. This offers the user an interference free unit as authorized users can retain the controller. There is also the opportunity to remote mount the controller. The standard is for the KP02 to be fitted loose inside the control panel.

The KP02 console unit is used to read or modify values or instructions. It is a digital 6 digit display with 6 indicator lights and 5 operating keys. Data transmission is at 1200 baud rate. The unit is self diagnostic for communication and sensors. The unit normally displays the Time.
Access to operating pressures, temperatures and faults is via input of an address against the menu.
The controller is password protected for access into the set point changes.

KP02 DISPLAY
ACCESSIBLE SETTING POINTS AND VARIABLES ON AN AIR-COOLED CHILLER

KP02 II. VARIABLES

All the following parameters can be read on the KP02 in the "setting points mode".

Address	*Designation*
0	Password
1	Faults reset
2	1st cooled water set-point
3	2nd cooled water set-point
4	Temperature deviation set-point between water inlet and outlet
*	Start / stop circuit n
*	Minimum cooled water inlet temperature
*	Minimum evaporating temperature
*	Hour of unoccupied period start
*	Hour of unoccupied period end
*	Day of unoccupied period start
*	Day of unoccupied period end
*	High limit pressure for fans regulation
*	Low limit pressure for fans regulation
*	Time delay for the increase or decrease of one ventilation stage

KP02 II. VARIABLES

All the following parameters can be read on the KP02 in the "variables mode".

Address	*Designation*
1	Cooled water inlet temperature
2	Cooled water outlet temperature
3	Ambient air temperature
*	Low pressure circuit n
*	High pressure on circuit n
*	Suction temperature on circuit n
*	Discharge temperature on compressor m circuit n
*	Expansion valve opening on circuit n

*** Consult the variables list of the considered chiller.**

Address	*Designation*
4	Number of stages requested by the compressors regulation
*	Regulation order for compressor m circuit n
*	Number of stages requested by the fans regulation on circuit n
*	Evaporating temperature on circuit n
*	Condensing temperature on circuit n

Address	*Designation*
0	Last fault code memory
5	Unit availability
*	Circuit N°* availability
*	Compressor N°* circuit availability
6	Evaporator inlet or outlet water sensor fault
7	Cooled water flow fault
8	Phase rotation control fault
9	Supply power fault on 230 V backed-up supply
10	Fans circuit-breaker fault
11/12	Pump circuit-breaker fault
13/14	Flow fault on pump & evaporator
*	Low pressure fault on circuit N°*
*	Probe or sensor fault on circuit N°*
*	Frost fault on circuit N°*
*	Insufficient superheat fault on circuit N°*
*	Expansion valve opening fault on circuit N°*
*	Circuit-breaker fault on compressor N°* circuit N°*
*	Oil pressure fault on compressor N°* on circuit N°*
*	High pressure fault on compressor N°* circuit N°*
*	Discharge temperature too high on compressor N°* circuit N°*
*	Internal protection fault on compressor N°* circuit N°*

The Climatic II controller with the KP07 LED Graphic display customer interface offers a superior level of information display to users and operators. The Graphic display screen shows all the operating conditions of the machine at a glance, this allows quick analysis of the system. This can be compared to other types of control interface where it is necessary to scroll through a number of individual points to establish the system operation. The LENNOX Climatic LED display allows at a glance complete information for analysis, which can take place either locally at the chiller or remotely using various communication options available.

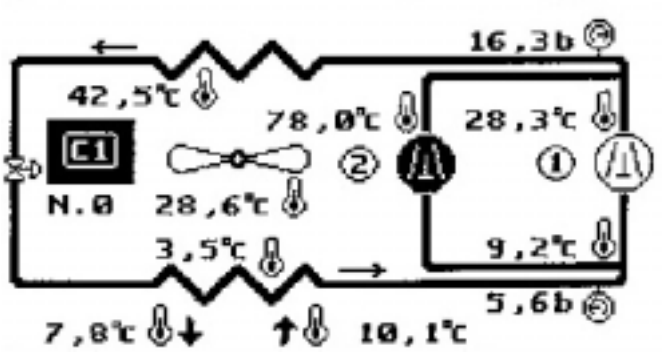

KP07 display

The Lennox Climatic II graphic display unit uses simple icons to show system operation, warnings and faults these need no translation and are universally understood this ensures that the Climatic controller is simple to use where ever its installed.

KP07 Visual Display Unit

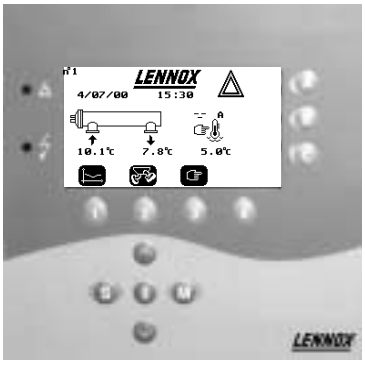

Black and white LCD crystal display backlit with 240x128 Pixels.

Functions

1. Status of each refrigerant circuit with circuit graphic displayed
2. Status of Pumps graphic display (chilled water, conden ser water and secondary system)
3. Fault history for each refrigeration circuit (last 24 occur rences) plus rest of the unit
4. Fault history for pumps
5. Hours run
6. Automatic balance of compressor run hours
7. Time clock, day, date
8. Chilled water set point
9. Programmable auto reset of chilled water set point based on ambient temperature
10. Programmable condenser fan staging
11. Start and stop of pumps (run and standby)
12. Auto switching if lead pump fails
13. Display of timer status (Start and anti recycle)
14. Display of chilled water temperature curve over 24Hrs
15. General machine faults
16. Refrigeration circuit faults
17. Compressor faults
18. Capacity staging
19. Common alarm
20. Fan circuit breaker trip
21. Pump circuit breaker trip
22. Water pressure low
23. Programmable temperature difference set point between flow and return water
24. Freeze protection
25. Programmable Minimum and maximum water set point
26. Self diagnostic on sensors and communications
27. Self diagnostic on electronic expansion valves
28. Phase protection
29. Password protection

The KP07, unit uses JBUS communication protocol at 4800 baud

FAULT DISPLAY

General machine faults

Chilled water temperature outside authorized range
Chilled water flow insufficient.
Absence of power on 230 V electrical supply to the machine.
Incorrect connection of 3 phases of general electrical supply to the machine.
Pump in operation
Pump stopped
Dialogue interrupted between 2 CPU cards on network.
Insufficient water flow although operational command has been issued to pump.
Tripping of thermo magnetic circuit breaker for at least one fan.
Tripping of thermo magnetic circuit breaker for pump.
Bad reception of 4/20 mA signal transmitted remotely for water instruction.
Dialogue interrupted between KP07 console and a CPU card on the network.
Temperature sensors or pressure detectors faulty.

Faults on each refrigeration circuit

Low pressure
Excess high pressure
Evaporator freezing.
Superheat insufficient.
Compressor stopped by refrigeration circuit on/off.
Compressor stopped by remote on / off command to machine.

Compressor faults

Tripping of thermo magnetic circuit breaker for compressor.
Insufficient oil pressure.
Discharge temperature too high.
Tripping of internal protection for compressor.

Climatic Options

The Climatic II controller can be interfaced with a number of options to expand the functionality of the system.

KP07 Remote

This provides a KP07 display linked to the chiller but remote mounted up to 1km of cable away from the chiller installation.

Multiple Chiller control

A remote mounted Climatic controller that can control and sequence upto eight identical chillers containing Climatic II controllers. This controller can also control the chillers to maintain a common chilled water set point in a primary chilled water supply.

JBUS Communication Interface

This is an additional microprocessor card that is able to provide information in the JBUS protocol to allow information to be exchanged between the Climatic control system and an external BMS system. Lennox have existing protocols in place with most BMS companies but this option can require additional support above the basic costs of the interface module.

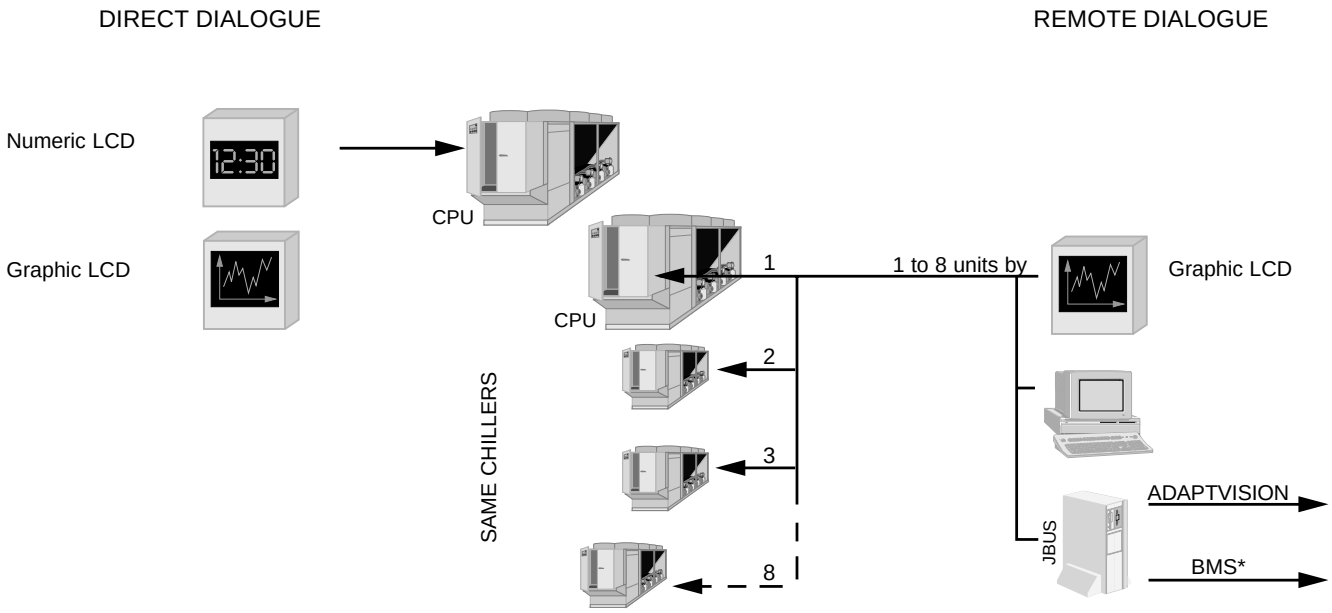

* BMS = Business Management Service

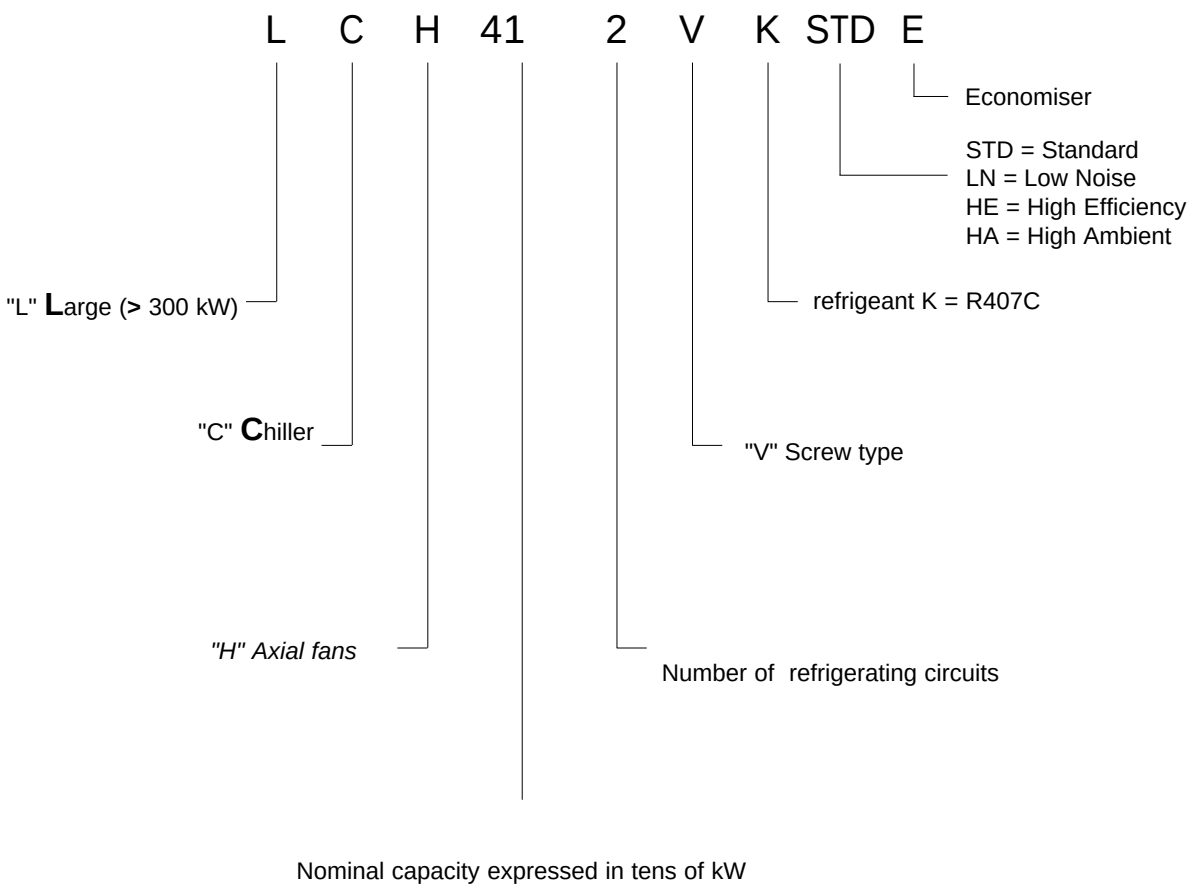
L C H 41 2 V K STD E
Economiser
STD = Standard
LN = Low Noise
HE = High Efficiency
HA = High Ambient
"L" Large (> 300 kW)
refrigeant K = R407C
"C" Chiller
"V" Screw type
"H" Axial fans
Number of refrigerating circuits
Nominal capacity expressed in tens of kW

ALTITUTE CORRECTION FACTOR

ELEVATION -M.	Qo CORRECTION
Sea Level	1.000
305	0.996
610	0.992
915	0.988
1220	0.984
1525	0.980

FOULING FACTORS (M^2-°C/W)

FOULING	Qo CORRECTION
0.000044	1.00
0.0000132	0.98

GLYCOL CORRECTION FACTOR

% BY WEIGHT	FREEZE POINT °C	PRESSURE DROP MULTIPLIER	CAPACITY FACTOR	FLOW CORRECTION FACTOR
10	-4	1.06	1.01	1.01
20	-10	1.13	1.018	1.05
30	-18	1.19	1.025	1.08
40	-27	1.28	1.033	1.15
50	-38	1.37	1.04	1.20

EcoMax

Standard

CONTENTS

EcoMax Standard

ECOMAX STD unit

The ECOMAX™ Standard range of Air cooled helical rotary screw chillers from LENNOX offer specifiers, owners and operators performance and reliability in a compact package. The standard range is fitted with 2,3 or 4 high performance, robust, Lennox screw compressors each in its own independent refrigeration circuit. Each refrigerant circuit has a dedicated condenser section and fans. The Lennox "*Hushtone*" fan is fitted as the standard and operates at 700rpm. Each refrigerant circuit contains an oversized filter drier, a mechanical liquid line stop valve with a charging port, electronic expansion valve, liquid sight glass and discharge check valve. The single DX evaporator has 2,3 or 4 refrigerant circuits and is fully insulated 13mm with close cell foam insulation sealed to form a vapour tight seal on the evaporator shell. The evaporator is fitted with vent and drain points and is supplied with flanged water connections, the flow and return water sensor pockets are mounted in the pipe stub sections.

The control and power sections are mounted in a single weatherproof compartment, all the compressor and condenser fan power supplies are individually fitted with thermal overloads. The three phase power and earth connections are via a low level gland plate and connect to a fused thermal overload ensuring complete discrimination. Separate electrical control and antifreeze heater single phase power supplies complete the hook up. The advanced Climatic II microprocessor controller fitted with the KP02 digital display customer interface is supplied as standard on these units. The KP02 customer interface is removable so that access to the control system can be totally controlled allowing only authorised access to the system configuration. All the chiller components are mounted to a section welded steel channel base frame that has been hot dipped galvanized for corrosion protection. The base has the lifting lugs and mounting points for anti-vibration fittings all pre-installed. The EcoMax range is built in accordance with current EEC norms and legislative requirements.
The EcoMax standard range has a large number of customer configurable options to meet the local legislative requirements and specific customer needs.

ECOMAX STD with anti intrusion grill

ECOMAX STD	Water outlet temp. °C	Air inlet temperature											
		28 °C		32 °C		35 °C		39°C		43 °C		47 °C	
		Qo	Pa	Qo	Pa	Qo	Pa	Qo	Pa	Qo	Pa	Qo	Pa
302VK	5	313	101	296	108	281	114	261	123	***144***	***79***	***131***	***86***
	7	334	104	316	111	301	117	280	126	***155***	***81***	***142***	***87***
	9	356	107	337	115	321	121	299	130	***167***	***82***	***153***	***89***
	11	378	111	358	118	342	124	319	133	***179***	***84***	***165***	***91***
352VK E	5	346	119	331	131	319	141	301	156	***168***	***96***	***157***	***106***
	7	367	122	352	134	339	145	321	160	***179***	***97***	***168***	***108***
	9	389	126	373	138	360	148	***202***	***89***	***191***	***98***	***180***	***109***
	11	411	129	394	142	381	152	***214***	***90***	***204***	***100***	***192***	***111***
402VK	5	372	115	352	124	337	131	315	141	292	153	***157***	***101***
	7	396	118	376	127	360	134	338	145	313	157	***170***	***102***
	9	422	121	401	130	384	137	360	148	335	160	***182***	***104***
	11	448	125	426	133	408	141	384	152	***211***	***98***	***196***	***106***
422VK E	5	400	128	386	140	373	151	356	167	***273***	***150***	***182***	***118***
	7	424	131	409	143	396	154	378	170	***206***	***107***	***195***	***119***
	9	449	133	433	146	420	157	400	174	***219***	***109***	***208***	***120***
	11	475	136	458	149	444	160	424	177	***233***	***110***	***221***	***122***
442VK	5	421	131	400	142	384	150	360	163	336	177	***181***	***116***
	7	448	135	427	145	409	154	385	167	359	181	***195***	***118***
	9	477	139	454	149	436	158	410	170	383	185	***209***	***120***
	11	506	142	482	153	463	161	436	174	***240***	***112***	***224***	***122***
452VK E	5	446	142	430	156	418	168	399	186	***217***	***118***	***206***	***131***
	7	472	145	456	159	443	171	423	189	***231***	***120***	***219***	***133***
	9	499	148	482	162	468	174	448	193	***245***	***121***	***232***	***134***
	11	527	151	509	165	494	178	473	196	***259***	***122***	***246***	***135***
502VK	5	509	159	482	171	460	180	430	194	398	209	***214***	***137***
	7	542	163	514	175	491	185	460	199	426	214	***231***	***139***
	9	577	168	547	179	523	189	490	203	***351***	***169***	***248***	***141***
	11	612	172	580	184	556	194	521	208	***287***	***133***	***266***	***144***
552VK E	5	547	179	526	198	509	214	483	237	***263***	***148***	***247***	***165***
	7	580	183	558	202	539	218	512	242	***280***	***150***	***264***	***167***
	9	613	187	590	206	570	223	542	247	***298***	***151***	***281***	***169***
	11	647	191	622	211	602	227	573	252	***316***	***153***	***299***	***170***
602VK	5	601	186	568	200	541	211	504	226	464	242	***250***	***157***
	7	641	192	606	205	578	216	539	232	***294***	***149***	***270***	***160***
	9	681	197	644	211	615	222	575	237	***316***	***152***	***291***	***163***
	11	722	203	684	216	654	227	612	243	***337***	***155***	***312***	***166***
652VK E	5	654	217	627	241	604	261	571	289	***312***	***179***	***292***	***199***
	7	692	222	664	246	641	266	606	296	***333***	***181***	***313***	***201***
	9	732	227	702	251	678	272	642	302	***354***	***182***	***334***	***204***
	11	772	232	741	257	716	277	***395***	***165***	***376***	***184***	***355***	***206***
702VK	5	691	209	655	225	627	239	588	259	546	282	***293***	***183***
	7	736	215	698	231	669	245	627	265	584	288	***315***	***186***
	9	782	221	743	237	712	251	668	271	***364***	***174***	***338***	***189***
	11	830	227	788	243	755	257	710	278	***389***	***176***	***361***	***192***

XXX *Water T = 5°C*

XXX *Water T = 6°C*

XXX *High pressure offloading operating*

Qo : *Cooling capacity in kW*

P : *Total power*

Fouling factor **:** 0,044 m²C/kW

ECOMAX	Water outlet temp. °C	Air inlet temperature											
		28 °C		32 °C		35 °C		39°C		43 °C		47 °C	
		Qo	Pa	Qo	Pa	Qo	Pa	Qo	Pa	Qo	Pa	Qo	Pa
752VK E	5	736	227	710	250	688	269	657	298	355	187	336	207
	7	779	232	752	255	729	275	696	304	377	189	357	209
	9	823	237	794	261	770	280	736	309	400	191	379	211
	11	868	243	838	266	813	286	777	315	423	193	401	213
803VK	5	776	235	737	254	706	269	662	292	616	318	331	207
	7	827	242	786	260	753	276	707	299	659	325	356	211
	9	880	248	836	267	802	282	754	305	571	271	382	214
	11	933	255	887	273	851	289	801	312	440	200	409	217
853VK E	5	825	255	796	280	772	302	737	335	399	212	378	235
	7	874	260	844	286	818	308	782	341	425	214	402	237
	9	924	266	892	292	865	314	827	347	450	216	427	239
	11	975	272	941	298	913	320	873	353	477	218	453	241
953VK	5	915	276	865	297	826	313	770	336	710	359	383	236
	7	975	284	923	304	882	320	824	344	762	368	414	240
	9	1037	292	983	312	940	328	879	352	599	276	445	244
	11	1101	300	1044	320	999	336	936	360	640	281	478	249
1003 VK E	5	992	319	953	354	920	383	871	425	596	331	447	296
	7	1052	326	1010	361	976	391	926	434	509	269	478	300
	9	1112	333	1069	369	1033	399	981	443	541	271	510	303
	11	1175	340	1129	376	1092	406	755	310	574	274	543	306
1053VK	5	1026	319	973	345	930	366	870	397	592	310	440	276
	7	1092	328	1035	354	991	375	928	407	634	316	473	280
	9	1159	338	1100	363	1053	385	988	417	547	262	507	285
	11	1228	347	1166	373	1117	395	1049	428	584	266	543	290
1153 VK E	5	1099	351	1058	388	1025	418	976	464	535	284	506	315
	7	1162	360	1119	396	1084	427	748	326	568	287	538	318
	9	1227	368	1182	405	1145	436	791	331	602	290	571	321
	11	1293	377	1245	414	1207	445	836	336	637	294	604	325
1254VK	5	1187	368	1123	395	1072	417	999	448	922	480	503	314
	7	1265	378	1198	406	1145	428	1069	459	989	492	543	320
	9	1345	389	1275	416	1219	438	1141	470	634	303	585	325
	11	1427	400	1354	427	1296	449	1214	481	679	308	628	331
1354 VK E	5	1289	429	1238	476	1195	515	1131	573	628	356	589	397
	7	1366	439	1313	487	1268	527	1201	586	670	360	629	402
	9	1445	449	1389	497	1342	538	1273	598	712	364	671	406
	11	1526	459	1467	507	1418	549	1347	611	756	367	713	410
1404VK	5	1362	431	1289	465	1232	494	1151	536	634	339	585	369
	7	1447	444	1370	478	1310	507	1226	550	679	344	628	375
	9	1536	457	1456	491	1393	520	1305	564	727	351	673	382
	11	1629	470	1545	505	1479	535	1388	566	777	357	722	389
1504 VK E	5	1462	477	1406	527	1360	569	1294	631	712	381	673	423
	7	1544	489	1485	539	1437	581	793	349	756	386	715	428
	9	1630	501	1568	552	1518	594	840	353	801	390	759	432
	11	1719	514	1654	565	1602	608	890	358	849	395	805	437

XXX *Water T = 5°C*

XXX *Water T = 6°C*

XXX *High pressure offloading operating*

Qo : *Cooling capacity in kW*

P : *Total power*

Fouling factor **:** 0,044 m^2C/kW

COMPRESSORS AND REFRIGERANT CIRCUITS

TYPE	ECOMAX STD	302 VK 352 VKE	402 VK 422 VKE	442 VK 452 VKE	502 VK 552 VKE	602 VK 652 VKE	702 VK 752 VKE
Compressor type		Semi-hermetic screw					
Number of compressors / Number of circuits		2/2	2/2	2/2	2/2	2/2	2/2
Capacity steps for the unit (1)	%	0-12-25-38-50 62-75-88-100		0-12-25-38-50 62-75-88-100		0-12-25-38-50 62-75-88-100	
Refrigerant charge per circuit	***circuit*** kg	**a :** 42 **b :** 42	**a :** 64 **b :**49	**a :** 64 **b :** 64	**a :** 83 **b :** 64	**a :** 83 **b :** 64	**a :** 98 **b :** 98
Oil charge per compressor	l	14	14	14	a : 18 b : 14	18	18

TYPE	ECOMAX STD		803 VK 853 VKE	953 VK 1003 VKE	1053 VK 1153 VKE	1254VK 1354 VKE	1404 VK 1504 VKE
Compressor type			Semi-hermetic screw				
Number of compressors / Number of circuits			3/3	3/3	3/3	4/4	4/4
Capacity steps for the unit (1)	%		0-12-25-33 -50-58-66-83- 92-100	0-16-25-33-50-58- 66-83-92-100		0-12-19-25-37 44-50-62-69-75 87-94-100	
Refrigerant charge per circuit	***circuit*** kg	**a** **b** **c**	**a** : 98 **b** : 64 **c** : 64	**a** : 83 **b** : 83 **c** : 98	**a** : 83 **b** : 83 **c** : 98	**all** : 83	**all** : 83
Oil charge per compressor	l		**a** : 18 **b** : 14 **C** : 14	**all :** 18	**all :** 18	**all :** 18	**all :** 18

EVAPORATORS

TYPE	ECOMAX	302 VK 352 VKE	402 VK 422 VKE	442 VK 452 VKE	502 VK 552 VKE	602 VK 652 VKE	702 VK 752 VKE
Number		1					
Water volume	dm^3	82	77	94	109	189	176
Water piping	(1)	DN 150	DN 150	DN 150	DN 200	DN 200	DN 200
Test pressure - Bar	*Water* Refrigerant	15 34	15 34	15 34	15 34	15 34	15 34
Operating pressure - Bar	*Water* Refrigerant	10 17	10 17	10 17	10 17	10 17	10 17

TYPE	ECOMAX	803 VK 853 VKE	953 VK 1003 VKE	1053 VK 1153 VKE	1254 VK 1354 VKE	1404 VK 1504 VKE
Number		1				
Water volume	dm^3	176	323	307	307	268
Water piping	(1)	DN 200	DN 250	DN 250	DN 250	DN 250
Test pressure - Bar	*Water* Refrigerant	15 34	15 34	15 34	15 34	15 34
Operating pressure - Bar	*Water* Refrigerant	10 17	10 17	10 17	10 17	10 17

(1) : PN 16 flanges

CONDENSERS

TYPE	ECOMAX STD	302 VK 352 VKE	402 VK 422 VKE	442 VK 452 VKE	502 VK 552 VKE	602 VK 652 VKE
Ventilation type		Axial - Direct coupling 700 tr/mn				
Fan number		5	7	8	9	10
Air flow rate	m^3/h	119 600	166 200	189 600	214 400	239 200
Total input	kW	8,5	11,9	13,6	15,3	17,0
Each fan nominal load current	A	5,5	5,5	5,5	5,5	5,5

TYPE	ECOMAX STD	702 VK 752 VK	803 VK 853 VKE	953 VK 1003 VKE	1053 VK 1153 VKE	1254 VK 1354 VKE	1404 VK 1504 VKE
Ventilation type		Axial - Direct coupling 700 tr/mn					
Fan number		12	14	16	16	20	20
Air flow rate	m^3/h	285 600	332 400	382 000	382 000	478 400	478 400
Total input	kW	20,4	23,8	27,2	27,2	34	34
Each fan nominal load current	A	5,5	5,5	5,5	5,5	5,5	5,5

ELECTRICAL DATA

LENNOX

STD	302VK	352VKE	402 VK	422VKE	442VK	452VKE	502VK	552VKE	602VK	652VKE	702VK
Maxi power (kW)	141	161	167	183	192	204	229	242	265	279	299
Maxi current (A)	245	277	297	322	343	361	398	424	452	486	521
Maxi starting current (Amp)	440	455	585	600	630	640	785	795	840	855	925

STD	752VKE	803VK	853VKE	953VK	1003VKE	1053VK	1153VKE	1254VK	1354VKE	1404VK	1504VKE
Maxi power (kW)	295	341	351	400	421	445	439	530	558	590	582
Maxi current (A)	517	602	618	682	733	769	763	901	969	1017	1009
Maxi starting current (Amp)	920	1005	1020	1070	1105	1170	1165	1290	1340	1420	1415

Maximum current and power calculated at 400V/3/50Hz for compressor operation at +12/60°C
Max starting current is when last compressor starts up plus all the remaining system is at full load with all condenser fans running.

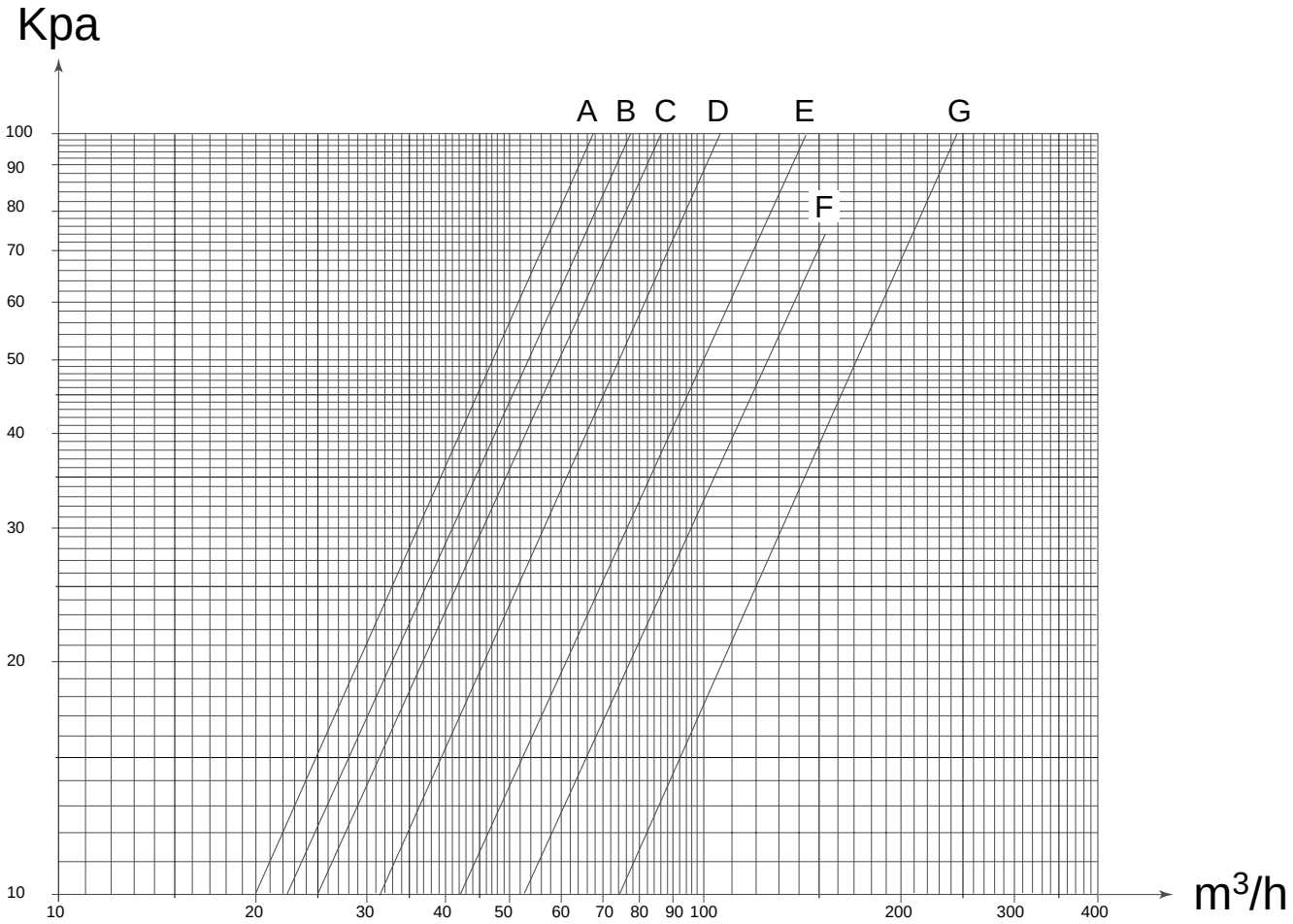

MODEL	ECOMAX STD	302VK 352 VKE	402VK 422VKE	442VK 452VKE	502VK 552VKE	602VK 652VKE
Curve		A	B	C	D	E

MODEL	ECOMAX STD	702VK 752 VKE	803VK 853VKE	953VK 1003VKE	1053VK 1153VKE	1254VK 1354VKE	1404VK 1504VKE
Curve		F	F	G	G	G	G

Pressure drops are given for informations only. A tolerance of +/- 20kPa must be considered when selecting water pumps.

1 302 VK - 352 VKE

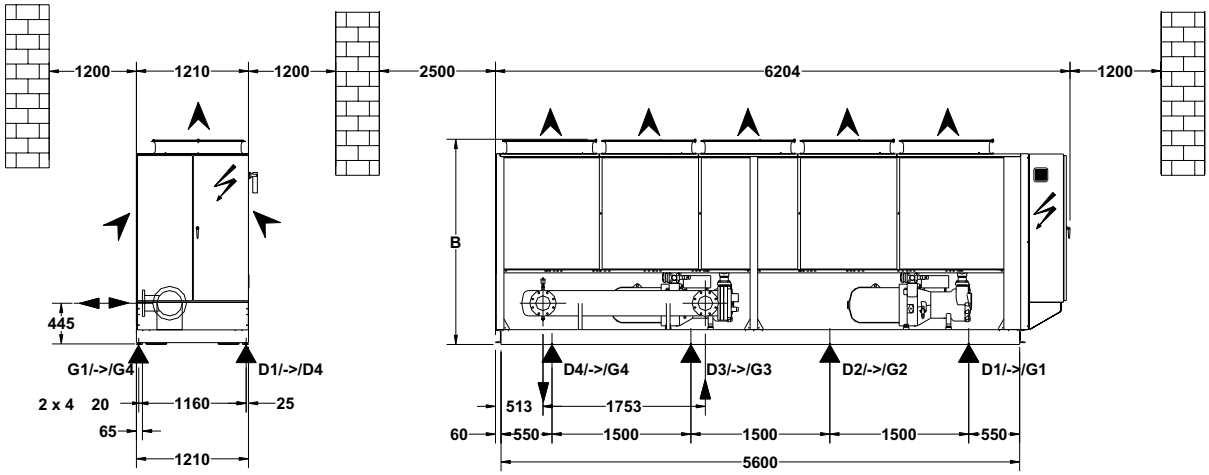

2 402 VK at 1504 VKE

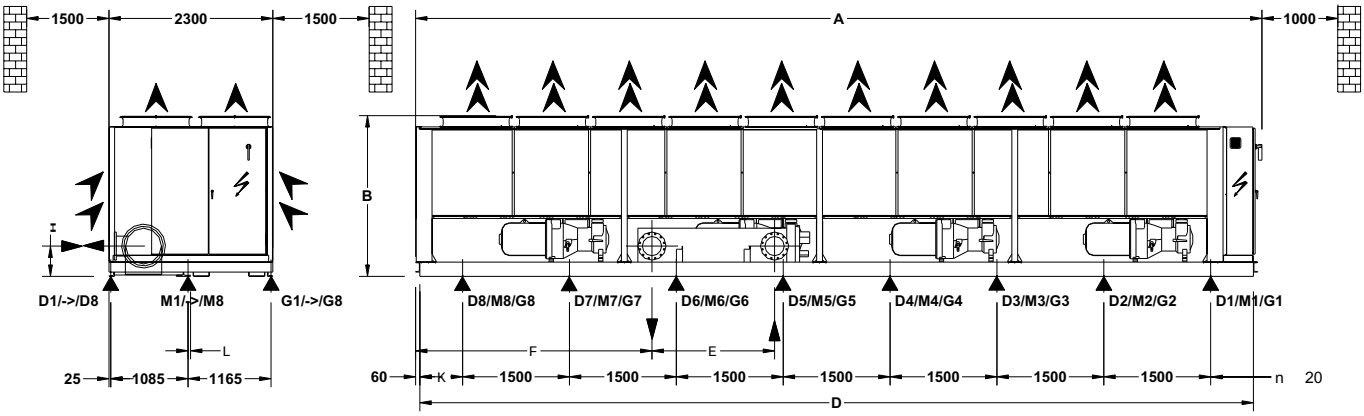

ECOMAX STD		402VK 422VKE	442VK 452VKE	502VK 552VKE	602VK 652VKE	702VK 752VKE	803VK 853VKE	953VK 1003VKE	1053VK 1153VKE	1254VK 1354VKE	1404VK 1504VKE
Drawing		**2**	**2**	**2**	**2**	**2**	**2**	**2**	**2**	**2**	**2**
A	mm	5050	5050	6260	6260	7458	8460	9670	9670	11880	11880
B	mm	2213	2213	2213	2233	2233	2233	2253	2253	2253	2253
D	mm	4390	4390	5600	5600	6800	8280	9490	9490	11700	11700
E	mm	1753	2253	1723	1724	1724	1724	2224	1721	1721	1721
F	mm	643	263	533	524	2374	2099	2391	2386	3318	3318
H	mm	385	390	405	450	450	450	500	425	425	425
K	mm	695	695	550	550	400	390	245	245	600	600
L	mm	20	20	20	30	30	30	35	35	35	35
n Ø 20		3x3	3x3	3x4	3x4	3x5	3x6	3x7	3x7	3x8	3x8

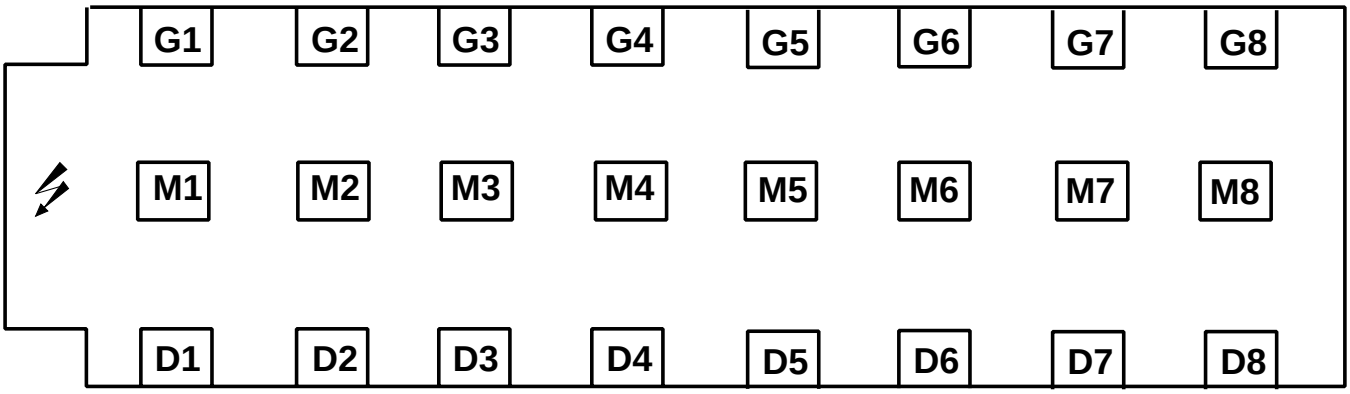

Lennox recommend load distribution as detailed above.

To avoid the M point load, it is possible to support the unit Gi and Di point only. In that case, the new value G'i and D'i will be :

$$G'i = \frac{Gi + Mi}{2}$$

$$D'i = \frac{Di + Mi}{2}$$

STD		302VK 352VKE	402VK 422VKE	442VK 452VKE	502VK 552VKE	602VK 652VKE	702VK 752VKE	803VK 853VKE	953VK 1003VKE	1053VK 1153VKE	1254VK 1354VKE	1404VK 1504VKE
Weight without water	kg	2548	3243	3466	4151	5021	5544	6254	7526	7453	9473	9672
Operating weight	kg	2630	3320	3560	4260	5210	5720	6430	7740	7760	9780	9940
D1	kg	440	410	640	390	640	620	420	420	420	550	550
D2	kg	320	390	370	440	450	450	410	470	470	490	490
D3	kg	310	410	320	410	400	370	410	460	460	460	460
D4	kg	280	-	-	280	390	330	400	440	440	430	440
D5	kg	-	-	-	-	-	210	340	410	410	440	440
D6	kg	-	-	-	-	-	-	190	330	330	430	430
D7	kg	-	-	-	-	-	-	-	190	190	420	420
D8	kg	-	-	-	-	-	-	-	-	-	370	370
M1	kg	-	400	500	390	510	530	450	460	460	600	600
M2	kg	-	410	360	430	410	500	460	490	490	520	520
M3	kg	-	430	410	430	450	490	460	500	500	490	490
M4	kg	-	-	-	390	550	420	480	490	500	480	490
M5	kg	-	-	-	-	-	260	410	500	510	510	510
M6	kg	-	-	-	-	-	-	230	450	400	410	510
M7	kg	-	-	-	-	-	-	-	210	210	450	460
M8	kg	-	-	-	-	-	-	-	-	-	400	410
G1	kg	380	260	280	250	280	320	300	310	310	400	400
G2	kg	250	240	250	170	210	320	260	250	250	250	250
G3	kg	280	370	430	250	330	360	350	250	250	210	210
G4	kg	370	-	-	430	590	310	360	290	300	230	230
G5	kg	-	-	-	-	-	230	300	350	370	320	320
G6	kg	-	-	-	-	-	-	200	290	310	340	350
G7	kg	-	-	-	-	-	-	-	180	180	280	280
G8	kg	-	-	-	-	-	-	-	-	-	300	310

ECOMAX STD	Spectrum per octave band (dBA) 63 Hz	125 Hz	250 Hz	500 Hz	1000 Hz	2000 Hz	4000 Hz	8000 Hz	Global sound power dBA
302VK/352VKE	72	82	88	90	90	87	83	75	**95**
402VK/422VKE	73	84	89	91	91	88	84	76	**97**
442VK/452VKE	74	84	90	92	92	89	84	76	**97**
502VK/552VKE	74	85	90	92	92	89	84	77	**98**
602VK/652VKE	75	85	91	93	92	89	84	77	**98**
702VK/752VKE	76	86	92	94	94	91	86	79	**99**
803VK/853VKE	76	87	92	94	94	91	86	79	**100**
953VK/1003VKE	77	87	93	95	94	92	87	80	**100**
1053VK/1153VKE	77	87	93	95	96	92	87	80	**101**
1254VK/1354VKE	78	88	94	96	95	93	88	81	**101**
1254VK/1354VKE	78	88	94	96	97	93	88	81	**102**

Global sound power level measured in compliance with ISO standard 3744.
Only the sound power spectrum and the global sound power value are used in determining pressure characteristics at owner land limit.

MODEL ECOMAX	302VK 352VKE	402VK 422VKE	442VK 452VKE	502VK 552VKE	602VK 652VKE	702VK 752VKE	803VK 853VKE	953VK 1003VKE	1053VK 1153VKE	1254VK 1354VKE	1404VK 1504VKE
Leaving chilled water temperature (1)	Minimum : + 5°C / Minimum avec 30% glycol : -10°C Maximum : +12°C										
Chilled water entering temperature	Minimum : (2) Maximum : +20°C										
Difference chilled water inlet/outlet	Minimum : (3) Maximum : +8 °C										
Maximum water flow rate m³/h	89,3	89,3	89,3	153,5	153,5	153,5	153,5	240	240	240	240

(1) *Below +5°C, add glycol to the heating fluid.*

(2) *Value corresponding to the minimum of 5°C chilled water leaving temperature at considered flow rate*

(3) *Corresponding to the evaporator acceptable maximum flow rate*

APART FROM THESE VALUES, PLEASE CONSULT US

MAXIMUM AMBIENT AIR TEMPERATURE

Temperatures are calculated according to start-up units conditions, with two differents configurations

❶ Full load starting : maxi.conditions (1)

❷ HP offloading operation

STANDARD

Maxi ambient air temperature (°C)

STD	302VK	352VKE	402 VK	422VKE	442VK	452VKE	502VK	552VKE	602VK	652VKE	702VK
Configuration ❶	41	37,5	43,5	40,5	43,5	41,5	42	39	42	39	42,5
Configuration ❷	48	46,5	49,5	48	49,5	48,5	48,5	47,5	48,5	47,5	49

Maxi ambient air temperature (°C)

STD	752VKE	803VK	853VKE	953VK	1003VKE	1053VK	1153VKE	1254VK	1354VKE	1404VK	1504VKE
Configuration ❶	40,5	42,5	40,5	42	39	39,5	37,5	42	39	39,5	37,5
Configuration ❷	48	49	48	48,5	47,5	47,5	46,5	48,5	47,5	47,5	46,5

(1) : Operating limits R407C : 11°C/60°C
Operating limits R22 : 10°C/62°C

Low Noise

CONTENTS

EcoMax Low Noise

The ECOMAX™ Low Noise range of units uses the same range of Quality components that are utilized in the Standard range previously detailed. In addition the Low Noise range uses larger condenser surface with low speed fans to achieve similar capacity range as the Standard units. The already low noise helical rotary compressors are installed in an acoustical sheet metal enclosure, which is lined with sound attenuating material. Compartment is covered with sound-insulated foam: PAE 28 mm, 3 kg/m2 mass, protection films, fire classification M1.

This combination significantly reduces the sound power from the chiller. The utilisation of low speed rotary compressors and the management of the oil system within the compressor, combined with the acoustic compressor treatment results in an extremely low emitted sound level radiated from the chiller. The ECOMAX™ Low Noise range is supplied with both low speed fans and the compressor acoustic enclosure as the standard.
The addition of condenser surface area means there is no compromise in performance when selecting a ECOMAX™ Low Noise chiller. These units are built and factory tested to the same demanding quality standards that the Lennox brand is renown for.

ECOMAX LN unit with anti intrusion grill

ECOMAX LN	Water outlet temp. °C	Air inlet temperature											
		28 °C		32 °C		35 °C		39°C		43 °C		47 °C	
		Qo	Pa	Qo	Pa	Qo	Pa	Qo	Pa	Qo	Pa	Qo	Pa
302VK	5	323	95	306	102	292	108	272	116	251	126	***136***	***81***
	7	345	98	327	105	312	110	291	119	269	129	***147***	***82***
	9	367	101	348	108	333	114	311	122	288	132	***159***	***84***
	11	391	104	371	111	355	117	332	125	***185***	***79***	***171***	***85***
352VK E	5	354	110	340	121	329	131	312	145	***172***	***89***	***162***	***99***
	7	376	113	361	124	349	134	332	148	***184***	***90***	***173***	***101***
	9	398	116	383	127	371	137	352	152	***196***	***92***	***185***	***102***
	11	421	119	406	131	392	141	373	156	***209***	***93***	***197***	***103***
402VK	5	381	108	362	116	347	123	326	133	303	144	***162***	***94***
	7	407	111	387	119	371	126	348	136	325	148	***175***	***96***
	9	433	114	412	122	395	129	372	139	347	151	***188***	***98***
	11	460	117	438	125	421	132	396	142	370	154	***202***	***99***
422VK E	5	407	118	393	130	382	140	365	155	345	173	***187***	***110***
	7	432	121	418	133	405	143	387	158	367	176	***199***	***111***
	9	457	123	442	136	429	146	411	161	***316***	***144***	***212***	***112***
	11	484	126	468	138	454	149	435	165	***335***	***146***	***226***	***113***
442VK	5	431	122	411	132	394	141	371	153	347	167	***186***	***109***
	7	460	126	438	136	421	144	397	156	371	170	***200***	***111***
	9	489	129	466	139	448	147	423	160	396	174	***215***	***112***
	11	520	133	496	143	477	151	450	163	422	178	***230***	***114***
452VK E	5	453	131	439	144	427	156	409	173	389	192	***210***	***122***
	7	480	133	465	147	452	158	433	176	413	196	***223***	***123***
	9	508	136	492	150	479	161	459	179	437	199	***237***	***125***
	11	**537**	**139**	520	153	506	164	485	182	462	203	***251***	***126***
502VK	5	523	148	496	160	475	169	445	183	413	198	***221***	***128***
	7	557	152	529	164	507	173	476	187	442	202	***238***	***131***
	9	593	157	564	168	540	178	507	191	473	207	***256***	***133***
	11	630	161	599	173	574	182	540	196	504	212	***274***	***135***
552VK E	5	558	165	538	183	522	198	497	220	469	245	***254***	***154***
	7	591	168	570	186	553	202	527	224	***379***	***182***	***271***	***155***
	9	626	172	604	190	585	206	558	229	***402***	***185***	***288***	***157***
	11	661	176	637	194	618	209	590	233	***323***	***142***	***306***	***158***
602VK	5	619	174	586	188	560	198	523	213	483	229	***259***	***148***
	7	660	179	626	193	598	203	559	219	518	235	***280***	***151***
	9	702	185	666	198	637	209	597	224	554	240	***301***	***154***
	11	745	190	707	203	677	214	635	229	591	246	***322***	***156***
652VK E	5	668	199	643	222	621	241	589	268	554	299	***301***	***185***
	7	708	204	681	227	659	246	626	274	***341***	***168***	***321***	***187***
	9	749	209	721	231	697	251	663	279	***363***	***169***	***342***	***189***
	11	791	213	761	236	737	255	701	285	***384***	***170***	***364***	***191***
702VK	5	709	196	673	211	646	224	607	243	565	265	***302***	***171***
	7	755	201	718	217	689	230	648	249	604	271	***325***	***174***
	9	803	207	764	222	733	235	690	255	645	277	***348***	***177***
	11	852	212	811	228	778	241	733	261	686	284	***372***	***179***

Qo : *Cooling capacity in kW*
P : *Total power*

Fouling factor **:** 0,044 m²C/kW

XXX *Water T = 5°C*

XXX *Water T = 6°C*

XXX *High pressure offloading operating*

ECOMAX LN	Water outlet temp. °C	Air inlet temperature											
		28 °C		32 °C		35 °C		39°C		43 °C		47 °C	
		Qo	Pa	Qo	Pa	Qo	Pa	Qo	Pa	Qo	Pa	Qo	Pa
752VK E	5	749	210	724	232	703	250	673	278	639	309	***343***	***193***
	7	793	215	767	237	745	255	713	283	678	314	***365***	***195***
	9	838	220	810	242	787	260	754	288	***407***	***178***	***388***	***197***
	11	884	225	855	247	831	265	796	293	***431***	***179***	***410***	***199***
803VK	5	796	220	757	237	726	252	683	274	637	299	***341***	***194***
	7	848	226	807	243	775	258	730	280	682	305	***367***	***197***
	9	903	232	859	250	825	264	778	287	727	312	***393***	***200***
	11	**958**	**238**	913	256	877	271	827	293	774	319	***421***	***203***
853VK E	5	839	235	812	260	789	280	755	311	718	346	***386***	***219***
	7	889	240	860	265	836	285	801	316	762	352	***411***	***221***
	9	**940**	**246**	910	270	884	291	847	322	***648***	***287***	***436***	***223***
	11	**993**	**251**	**960**	**276**	933	296	894	328	***685***	***292***	***462***	***225***
953VK	5	940	258	891	278	853	294	797	316	738	340	***493***	***268***
	7	1002	265	951	285	911	301	853	324	792	348	***428***	***226***
	9	1067	273	1013	293	971	309	911	332	847	356	***460***	***230***
	11	1133	281	1077	301	1032	316	970	339	904	365	***493***	***234***
1003 VK E	5	1012	293	975	326	944	354	897	395	845	440	***459***	***276***
	7	1073	300	1034	333	1002	361	953	402	***651***	***312***	***491***	***279***
	9	1136	306	1095	340	1061	368	1010	410	***692***	***316***	***523***	***282***
	11	1200	313	1157	346	1121	375	1069	418	***734***	***320***	***556***	***284***
1053VK	5	1056	298	1003	322	961	342	901	372	839	406	***455***	***258***
	7	1124	307	1068	331	1024	351	962	381	896	416	***488***	***263***
	9	1194	316	1135	340	1088	360	1023	391	***699***	***302***	***523***	***267***
	11	1266	325	1203	349	1155	370	1087	401	***745***	***309***	***560***	***272***
1153 VK E	5	1121	324	1082	358	1050	387	1003	430	***686***	***332***	***518***	***294***
	7	1186	332	1145	366	1112	395	1063	438	***728***	***336***	***551***	***297***
	9	1253	340	1210	374	1174	403	1123	447	***615***	***270***	***584***	***300***
	11	1321	348	1276	383	1238	412	1184	456	***651***	***273***	***619***	***303***
1254VK	5	1220	343	1158	370	1108	392	1036	422	960	454	***521***	***296***
	7	1301	353	1235	380	1183	402	1108	433	1029	465	***562***	***301***
	9	1384	363	1315	391	1260	412	1183	443	1100	476	***604***	***306***
	11	**1470**	**374**	1397	401	1340	423	1259	454	1173	488	***648***	***312***
1354 VK E	5	1316	393	1268	438	1227	476	1166	531	1098	592	***605***	***370***
	7	1395	402	1345	448	1302	486	1239	542	***685***	***334***	***646***	***374***
	9	**1477**	**412**	1423	458	1379	496	1313	553	***729***	***338***	***688***	***378***
	11	**1560**	**421**	**1504**	**467**	1457	505	1389	564	***773***	***340***	***732***	***381***
1404VK	5	1403	402	1332	435	1275	462	1195	503	1111	548	***605***	***346***
	7	**1492**	**414**	1416	447	1357	474	1273	515	***700***	***323***	***649***	***352***
	9	**1585**	**426**	**1505**	**460**	1443	487	1355	529	***749***	***329***	***695***	***358***
	11	**1682**	**439**	**1599**	**473**	**1533**	**501**	1442	543	***801***	***335***	***745***	***365***
1504 VK E	5	**1494**	**439**	1441	486	1397	525	1333	584	***728***	***355***	***690***	***395***
	7	**1579**	**450**	**1523**	**497**	**1477**	**537**	1410	596	***772***	***359***	***732***	***399***
	9	**1668**	**461**	**1609**	**509**	**1560**	**549**	**1490**	**608**	***819***	***363***	***777***	***403***
	11	**1760**	**473**	**1698**	**521**	**1647**	**561**	**1574**	**621**	***868***	***368***	***825***	***408***

Qo : *Cooling capacity in kW*

P : *Total power*

Fouling factor **:** 0,044 m^2C/kW

XXX *Water T = 5°C*

XXX *Water T = 6°C*

XXX *High pressure offloading operating*

COMPRESSORS AND REFRIGERANT CIRCUITS

TYPE	ECOMAX LN	302 VK 352 VKE	402 VK 422 VKE	442 VK 452 VKE	502 VK 552 VKE	602 VK 652 VKE	702 VK 752 VKE
Compressor type		Semi-hermetic screw					
Number of compressors / Number of circuits		2/2	2/2	2/2	2/2	2/2	2/2
Capacity steps for the unit (1)	%	0-12-25-38-50 62-75-88-100		0-12-25-38-50 62-75-88-100		0-12-25-38-50 62-75-88-100	
Refrigerant charge per circuit	kg circuit a b	**a :** 42 **b :** 42	**a :** 64 **b :** 49	**a :** 64 **b :** 64	**a :** 83 **b :** 64	**a :** 83 **b :** 83	**a :** 98 **a :** 98
Oil charge per compressor	l	14	14	14	a : 18 b : 14	18	18

TYPE	ECOMAX LN	803 VK 853 VKE	953 VK 1003 VKE	1053 VK 1153 VKE	1254VK 1354 VKE	1404 VK 1504 VKE
Compressor type		Semi-hermetic screw				
Number of compressors / Number of circuits		3/3	3/3	3/3	4/4	4/4
Capacity steps for the unit (1)	%	0-12-25-33 -50-58-66-83-92-100	0-16-25-33-50-58-66-83-92-100		0-12-19-25-37 44-50-62-69-75 87-94-100	
Refrigerant charge per circuit	kg circuit a b c	**a** : 98 **b** : 64 **c** : 64	**a** : 83 **b** : 83 **c** : 98	**a** : 83 **b** : 83 **c** : 98	**all** : 83	**all** : 83
Oil charge per compressor	l circuit	**a** : 18 **b** : 14 **c** : 14	**all :** 18	**all :** 18	**all :** 18	**all :** 18

EVAPORATORS

TYPE	ECOMAX LN	302 VK 352 VKE	402 VK 422 VKE	442 VK 452 VKE	502 VK 552 VKE	602 VK 652 VKE	702 VK 752 VKE
Number		1					
Water volume	dm^3	82	77	94	109	189	176
Water piping	(1)	DN 150	DN 150	DN 150	DN 200	DN 200	DN 200
Test pressure - Bar	*Water* Refrigerant	15 34	15 34	15 34	15 34	15 34	15 34
Operating pressure - Bar	*Water* Refrigerant	10 17	10 17	10 17	10 17	10 17	10 17

TYPE	ECOMAX LN	803 VK 853 VKE	953 VK 1003 VKE	1053 VK 1153 VKE	1254 VK 1354 VKE	1404 VK 1504 VKE
Number		1				
Water volume	dm^3	176	323	307	307	268
Water piping	(1)	DN 200	DN 250	DN 250	DN 250	DN 250
Test pressure - Bar	*Water* Refrigerant	15 34	15 34	15 34	15 34	15 34
Operating pressure - Bar	*Water* Refrigerant	10 17	10 17	10 17	10 17	10 17

CONDENSERS

TYPE	ECOMAX LOW NOISE	302 VK 352 VKE	402 VK 422 VKE	442 VK 452 VKE	502 VK 552 VKE	602 VK 652 VKE
Ventilation type		Axial - Direct coupling 550 tr/mn				
Fan number		5	7	8	9	10
Air flow rate	m³/h	99 200	137 200	156 400	177 400	198 400
Total input	kW	6	8,4	9,6	10,8	12
Each fan nominal load current	A	2,3	2,3	2,3	2,3	2,3

YPE	ECOMAX LOW NOISE	702 VK 752 VK	803 VK 853 VKE	953 VK 1003 VKE	1053 VK 1153 VKE	1254 VK 1354 VKE	1404 VK 1504 VKE
Ventilation type		Axial - Direct coupling 550 tr/mn					
Fan number		12	14	16	16	20	20
Air flow rate	m³/h	236 000	274 400	316 400	382 000	478 400	478 400
Total input	kW	14,4	16,8	19,2	19,2	24	24
Each fan nominal load current	A	2,3	2,3	2,3	2,3	2,3	2,3

ELECTRICAL DATA

LENNOX

LOW NOISE	302VK	352VKE	402 VK	422VKE	442VK	452VKE	502VK	552VKE	602VK	652VKE	702VK
Maxi power (kW)	138	158	164	180	188	200	224	237	260	274	293
Maxi current (A)	229	261	275	300	318	336	369	395	420	454	483
start-up intensity (Amp)	415	430	555	570	595	605	750	755	800	815	875

LOW NOISE	752VKE	803VK	853VKE	953VK	1003VKE	1053VK	1153VKE	1254VK	1354VKE	1404VK	1504VKE
Maxi power (kW)	289	334	344	392	413	437	431	520	548	580	572
Maxi current (A)	479	558	574	631	682	718	712	837	905	953	945
start-up intensity (Amp)	875	950	970	1010	1045	1110	1110	1215	1265	1345	1340

Maximum current and power calculated at 400V/3/50Hz for compressor operation at +12/60°C
Max starting current is when last compressor starts up plus all the remaining system is at full load with all condenser fans running.

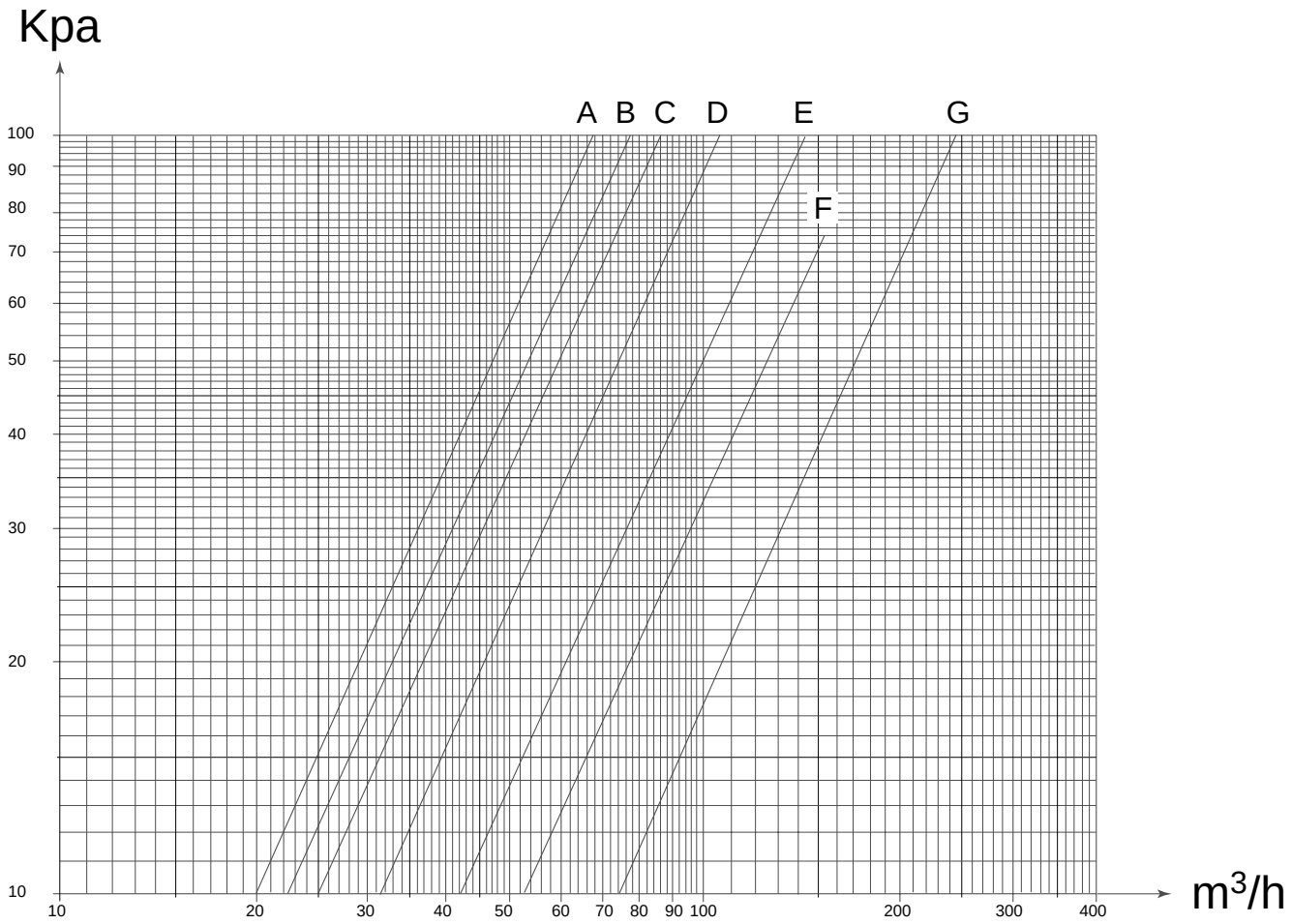

MODELE ECOMAX	302VK 352 VKE	402VK 422VKE	442VK 452VKE	502VK 552VKE	602VK 652VKE
Curve	A	B	C	D	E

MODELE ECOMAX	702VK 752 VKE	803VK 853VKE	953VK 1003VKE	1053VK 1153VKE	1254VK 1354VKE	1404VK 1504VKE
Curve	F	F	G	G	G	G

Pressure drops are given for informations only. A tolerance of +/- 20kPa must be considered when selecting water pumps.

1 302 VK - 352 VKE

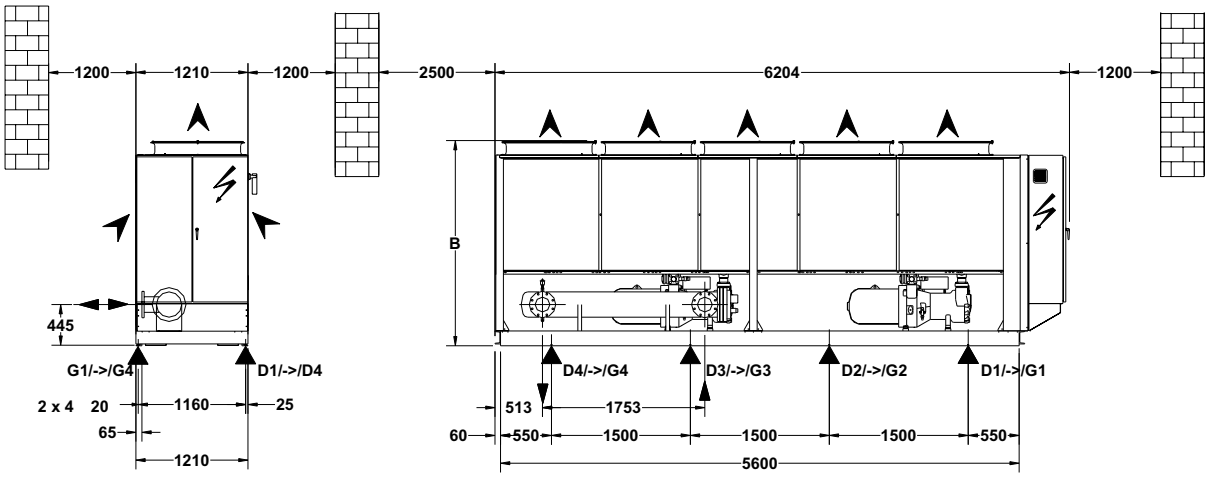

2 402 VK at 1504 VKE

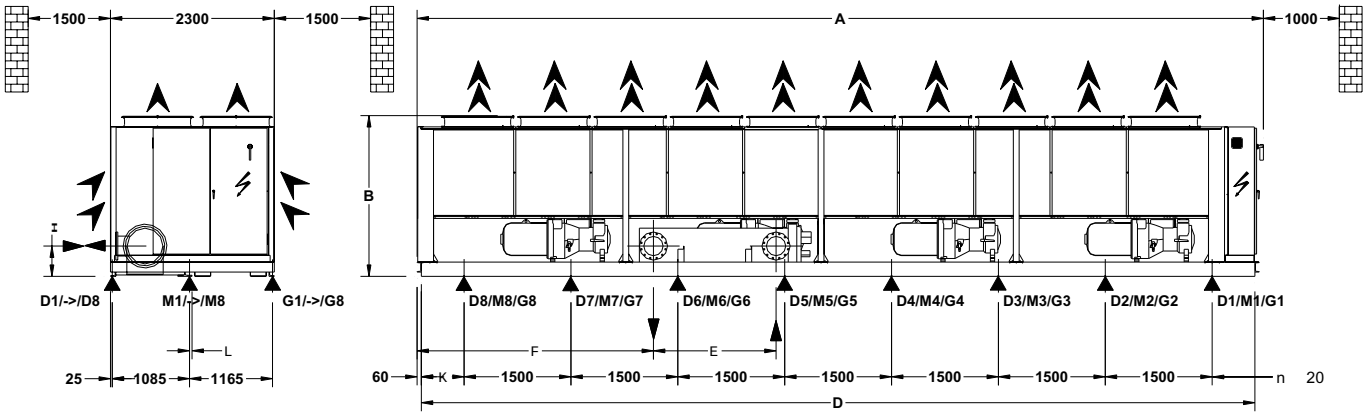

LOW NOISE		402VK 422VKE	442VK 452VKE	502VK 552VKE	602VK 652VKE	702VK 752VKE	803VK 853VKE	953VK 1003VKE	1053VK 1153VKE	1254VK 1354VKE	1404VK 1504VKE
Drawings		**2**	**2**	**2**	**2**	**2**	**2**	**2**	**2**	**2**	**2**
A	mm	5050	5050	6260	6260	7458	8460	9670	9670	11880	11880
B	mm	2410	2410	2410	2430	2430	2430	2450	2450	2450	2450
D	mm	4390	4390	5600	5600	6800	8280	9490	9490	11700	11700
E	mm	1753	2253	1723	1724	1724	1724	2224	1721	1721	1721
F	mm	643	263	533	524	2374	2099	2391	2386	3318	3318
H	mm	385	390	405	450	450	450	500	425	425	425
K	mm	695	695	550	550	400	390	245	245	600	600
L	mm	20	20	20	30	30	30	35	35	35	35
n Ø 20		3x3	3x3	3x4	3x4	3x5	3x6	3x7	3x7	3x8	3x8

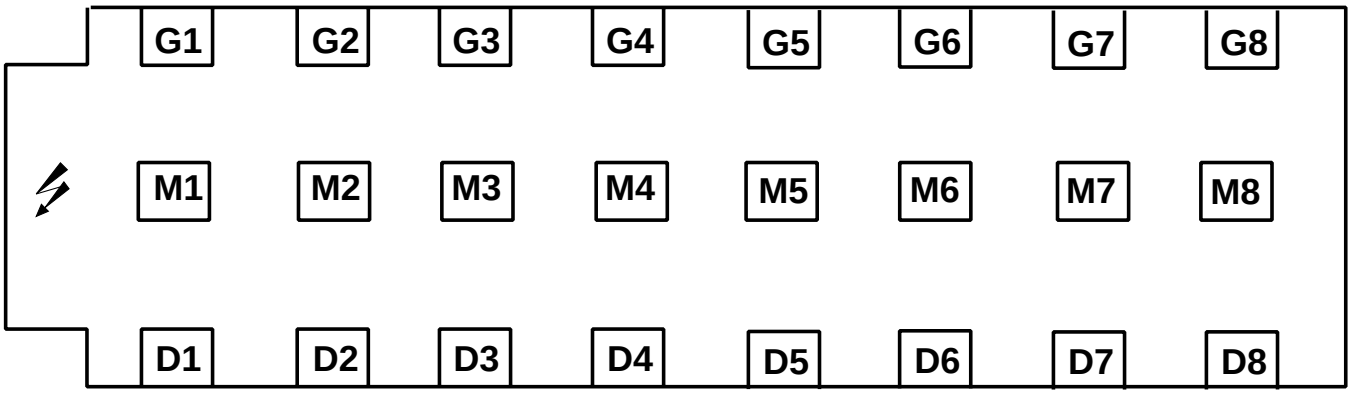

Lennox recommend load distribution as detailed above.
To avoid the M point load, it is possible to support the unit Gi and Di point only. In that case, the new value G'i and D'i will be :

$$G'i = \frac{Gi + Mi}{2}$$

$$D'i = \frac{Di + Mi}{2}$$

LN		302VK 352VKE	402VK 422VKE	442VK 452VKE	502VK 552VKE	602VK 652VKE	702VK 752VKE	803VK 853VKE	953VK 1003VKE	1053VK 1153VKE	1254VK 1354VKE	1404VK 1504VKE
Weight without water	kg	3608	3843	4176	4901	5711	6594	7394	8786	8733	11163	11272
Operating weight	kg	3690	3920	4270	5010	5900	6770	7570	9000	9040	11470	11540
D1	kg	610	480	710	450	700	700	480	490	490	640	640
D2	kg	390	430	410	470	470	500	470	520	520	550	550
D3	kg	390	460	400	440	420	410	450	510	510	510	510
D4	kg	460	-	-	330	460	370	430	480	480	470	470
D5	kg	-	-	-	-	-	260	380	440	440	470	470
D6	kg	-	-	-	-	-	-	230	360	370	460	460
D7	kg	-	-	-	-	-	-	-	210	220	460	460
D8	kg	-	-	-	-	-	-	-	-	-	440	440
M1	kg	-	480	590	480	590	640	550	560	560	720	720
M2	kg	-	480	430	500	460	600	560	590	590	630	630
M3	kg	-	520	520	510	500	570	550	600	600	580	580
M4	kg	-	-	-	470	660	500	550	570	570	560	570
M5	kg	-	-	-	-	-	340	470	570	570	570	570
M6	kg	-	-	-	-	-	-	300	470	470	500	500
M7	kg	-	-	-	-	-	-	-	270	270	520	530
M8	kg	-	-	-	-	-	-	-	-	-	500	510
G1	kg	570	330	370	340	350	420	390	410	410	530	530
G2	kg	330	290	300	210	240	390	340	320	320	330	330
G3	kg	370	450	540	290	370	410	410	320	320	280	280
G4	kg	570	-	-	520	680	360	410	340	350	280	280
G5	kg	-	-	-	-	-	300	340	400	410	360	360
G6	kg	-	-	-	-	-	-	260	330	340	390	390
G7	kg	-	-	-	-	-	-	-	240	230	330	350
G8	kg	-	-	-	-	-	-	-	-	-	390	410

ECOMAX LN	Spectrum per octave band (dBA) 63 Hz	125 Hz	250 Hz	500 Hz	1000 Hz	2000 Hz	4000 Hz	8000 Hz	Global sound power dBA
302VK/352VKE	62	72	82	84	84	82	77	67	**89**
402VK/422VKE	64	73	84	85	85	84	78	68	**91**
442VK/452VKE	64	74	84	85	85	84	79	69	**91**
502VK/552VKE	65	74	85	86	86	85	79	70	**92**
602VK/652VKE	65	75	85	86	86	85	80	70	**92**
702VK/752VKE	66	76	86	87	88	86	80	71	**93**
803VK/853VKE	67	76	87	88	88	87	81	72	**94**
953VK/1003VKE	67	77	87	88	88	87	82	72	**94**
1053VK/1153VKE	67	77	87	88	89	88	82	72	**95**
1254VK/1354VKE	68	78	88	89	89	88	83	73	**95**
1254VK/1354VKE74	68	78	88	90	90	88	83	73	**96**

Global sound power level measured in compliance with ISO standard 3744.
Only the sound power spectrum and the global sound power value are used in determining pressure characteristics at owner land limit.

MODEL ECOMAX	302VK 352VKE	402VK 422VKE	442VK 452VKE	502VK 552VKE	602VK 652VKE	702VK 752VKE	803VK 853VKE	953VK 1003VKE	1053VK 1153VKE	1254VK 1354VKE	1404VK 1504VKE
Leaving chilled water temperature (1)	Minimum : + 5°C / Minimum avec 30% glycol : -10°C Maximum : +12°C										
Chilled water entering temperature	Minimum : (2) Maximum : +20°C										
Difference chilled water inlet/outlet	Minimum : (3) Maximum : +8 °C										
Maximum water flow rate m^3/h	89,3	89,3	89,3	153,5	153,5	153,5	153,5	240	240	240	240

(1) *Below +5°C, add glycol to the heating fluid.*

(2) *Value corresponding to the minimum of 5°C chilled water leaving temperature at considered flow rate*

(3) *Corresponding to the evaporator acceptable maximum flow rate*

APART FROM THESE VALUES, PLEASE CONSULT US

MAXIMUM AMBIENT AIR TEMPERATURE

Temperatures are calculated according to start-up units conditions, with two differents configurations

❶ Full load starting : maxi.conditions (1)

❷ HP offloading operation

LOW NOISE

Maxi ambient air temperature (°C)

LN	302VK	352VKE	402 VK	422VKE	442VK	452VKE	502VK	552VKE	602VK	652VKE	702VK
Configuration ❶	43	40	45,5	42,5	45,5	44	44	41,5	44,5	43	44,5
Configuration ❷	49,5	48	51	49,5	51	50	50,5	49	50,5	49,5	50,5

Maxi ambient air temperature (°C)

LN	752VKE	803VK	853VKE	953VK	1003VKE	1053VK	1153VKE	1254VK	1354VKE	1404VK	1504VKE
Configuration ❶	43	44,5	43	44	41,5	42	41	44	41,5	42	41
Configuration ❷	49,5	50,5	49,5	50,5	49	49	48	50,5	49	49	48

(1) : Operating limits R407C :11°C/60°C

EcoMax

High Efficiency

CONTENTS

EcoMax High Efficiency

ECOMAX HE unit

The EcoMax high efficiency range of units is designed to ensure that cooling both at full and part load is provided at the minimum electrical power absorbed. This provides the owner with the lowest operating costs and by reducing power consumption the indirect global warming impact is minimised. The indirect global warming is the generation of CO_2 in producing the electrical power to operate the chiller by selecting from EcoMax high efficiency range CO_2 production is minimised.
When selecting a Ecomax high efficiency unit the additional costs associated with the additional components required can be recovered in the first few years of operation. A Lennox EcoMax unit has a life expectancy of over 15 years so after the initial capital difference is recovered in the first few years the continued cost savings can be utilised for other purposes. The Ecomax high efficiency range uses oversized heat exchanger surfaces in both and condenser to get the highest efficiencies. The Climatic II controller is supplied with KP02 LED graphic display screen. The unit is fitted with the very latest in Electronic expansion valve technology that is controlled by the Climatic II and uses Lennox unique control algorithms to operate the compressors, condenser fans and expansion valve to provide the best operating efficiency at all operating conditions. The Climatic II controller is looking at 2050 different operating parameters every minute and making adjustments to ensure the efficient and safe operation of the chiller. Compressors on VKE models have Economisers fitted to help improve the overall refrigeration cycle efficiency.
The Ecomax uses the same range of components as the EcoMax Standard range of chillers and is also fully factory tested to ensure trouble free start up.

ECOMAX HE unit with anti intrusion grill

ECOMAX HE	Water outlet temp. °C	Air inlet temperature											
		28 °C		32 °C		35 °C		39°C		43 °C		47 °C	
		Qo	Pa	Qo	Pa	Qo	Pa	Qo	Pa	Qo	Pa	Qo	Pa
302VK	5	331	95	314	101	300	107	280	115	260	124	***139***	***82***
	7	354	97	336	104	321	110	301	118	279	127	***151***	***83***
	9	377	100	358	107	343	112	322	121	299	130	***163***	***85***
	11	401	103	381	110	366	115	344	124	320	133	***175***	***86***
352VK E	5	361	107	347	118	336	127	320	140	302	156	***165***	***99***
	7	383	110	369	121	358	130	341	143	322	159	***176***	***100***
	9	406	113	392	123	380	133	362	146	***199***	***91***	***188***	***101***
	11	430	115	415	126	403	136	384	150	***212***	***93***	***201***	***103***
402VK	5	388	108	370	116	355	123	334	133	311	144	287	157
	7	415	111	395	119	379	126	357	136	334	147	309	160
	9	442	114	421	122	405	129	382	139	357	150	***192***	***99***
	11	470	117	448	125	431	132	407	142	381	153	***205***	***101***
422VK E	5	413	117	400	129	388	138	372	153	354	169	***189***	***111***
	7	438	120	424	131	413	141	395	155	376	172	***202***	***112***
	9	464	122	450	134	437	143	420	158	399	175	***215***	***113***
	11	491	125	476	136	463	146	444	161	423	178	***229***	***114***
442VK	5	438	123	418	133	403	141	380	153	356	166	330	181
	7	468	126	447	136	430	144	406	156	381	169	354	185
	9	499	130	476	139	459	147	434	159	407	173	***218***	***114***
	11	530	133	507	142	488	150	461	162	434	176	***234***	***116***
452VK E	5	459	130	445	143	433	154	416	170	397	189	***213***	***124***
	7	486	133	472	145	460	156	441	173	421	191	***226***	***125***
	9	515	135	499	148	487	159	468	175	447	194	***240***	***126***
	11	**544**	**138**	528	151	514	162	494	178	472	197	***255***	***127***
502VK	5	534	148	507	160	486	169	457	182	425	197	392	213
	7	569	152	542	164	520	173	489	186	456	201	***321***	***170***
	9	606	156	577	168	554	177	522	190	487	205	***261***	***135***
	11	644	161	614	172	590	181	556	194	520	210	***280***	***137***
552VK E	5	566	162	548	179	532	194	508	215	481	239	***258***	***154***
	7	600	165	581	183	564	197	539	218	512	243	***275***	***156***
	9	636	169	615	186	597	200	571	222	543	247	***293***	***157***
	11	672	172	650	189	631	204	604	226	575	251	***311***	***158***
602VK	5	633	174	601	187	575	198	538	213	499	228	457	245
	7	675	179	642	192	614	203	576	217	535	233	***286***	***154***
	9	719	184	684	197	655	207	615	222	573	239	***307***	***156***
	11	764	189	727	202	697	212	655	227	611	244	***329***	***159***
652VK E	5	679	195	655	216	635	234	605	261	571	290	***306***	***185***
	7	720	199	695	220	674	238	642	265	607	295	***327***	***187***
	9	762	203	736	225	714	243	681	270	645	301	***348***	***189***
	11	806	208	778	229	754	247	721	274	683	306	***370***	***190***
702VK	5	723	196	688	211	661	223	622	242	581	263	538	287
	7	771	201	735	216	706	229	665	247	622	268	***331***	***177***
	9	821	206	783	221	752	234	709	252	664	274	***355***	***179***
	11	873	212	832	227	799	239	755	258	708	280	***379***	***182***

Qo : *Cooling capacity in kW*

P : *Total power*

Fouling factor **:** 0,044 m²C/kW

XXX *Water T = 5°C*

XXX *Water T = 6°C*

XXX *High pressure offloading operating*

ECOMAX	Water outlet temp. °C	Air inlet temperature											
		28 °C		32 °C		35 °C		39°C		43 °C		47 °C	
		Qo	Pa	Qo	Pa	Qo	Pa	Qo	Pa	Qo	Pa	Qo	Pa
752VK E	5	759	208	736	228	716	246	687	272	654	301	348	195
	7	804	212	779	232	759	250	728	276	694	306	370	196
	9	851	216	825	237	803	254	771	280	735	310	393	198
	11	899	221	871	241	848	259	814	285	777	315	416	199
803VK	5	811	221	773	238	742	252	700	273	654	297	606	324
	7	865	226	825	243	793	258	748	279	700	303	525	272
	9	922	232	879	249	845	263	798	285	748	309	401	204
	11	**979**	**238**	934	255	899	269	849	291	797	315	428	207
853VK E	5	850	234	824	257	802	276	770	305	734	339	392	221
	7	901	238	874	261	851	281	816	310	779	344	417	223
	9	**954**	**243**	925	266	900	286	864	315	825	349	443	224
	11	**1007**	**248**	**977**	**271**	**951**	**290**	913	320	872	354	469	226
953VK	5	959	258	912	278	873	294	819	316	761	340	698	365
	7	1024	265	974	285	934	301	877	323	816	347	545	277
	9	1091	273	1038	292	996	308	937	330	874	355	586	282
	11	1160	280	1104	300	1060	315	998	338	933	362	628	287
1003 VK E	5	1027	288	993	319	963	346	919	385	869	428	467	277
	7	1090	294	1053	325	1022	352	976	391	924	436	499	279
	9	1154	300	1116	331	1083	358	1035	398	982	443	532	282
	11	1220	306	1180	337	1146	364	1096	404	1041	450	565	283
1053 VK	5	1080	296	1027	320	986	339	928	368	866	400	580	318
	7	1151	304	1095	328	1052	347	991	376	926	409	499	266
	9	1224	312	1166	336	1120	355	1055	384	988	418	535	270
	11	1299	321	1237	344	1189	364	1122	393	1051	427	572	274
1153 VK E	5	1139	317	1102	349	1072	376	1027	417	977	464	526	294
	7	1206	324	1167	356	1135	384	1088	424	1037	471	560	297
	9	1275	331	1234	364	1200	391	1151	432	786	336	594	299
	11	1345	338	1302	371	1267	398	1215	439	832	340	629	302
1254 VK	5	1246	343	1185	370	1136	391	1065	421	990	453	908	486
	7	1329	352	1265	379	1214	400	1140	431	1061	463	574	307
	9	1416	362	1348	389	1294	410	1217	440	1136	473	617	312
	11	**1505**	**372**	1434	399	1377	420	1297	450	1212	483	662	316
1354 VK E	5	1337	385	1291	428	1253	464	1195	516	1130	575	616	370
	7	1418	393	1370	436	1330	472	1270	526	1202	586	657	373
	9	**1501**	**401**	1451	444	1409	481	1347	535	1277	596	700	376
	11	**1587**	**410**	**1535**	**453**	**1490**	**489**	1425	543	1354	606	744	379
1404 VK	5	1437	398	1367	430	1311	456	1233	495	1149	538	618	349
	7	**1530**	**409**	1456	441	1397	467	1314	506	1227	550	663	355
	9	**1627**	**421**	**1549**	**452**	**1487**	**478**	1400	518	1309	563	711	360
	11	**1730**	**433**	**1647**	**464**	**1582**	**491**	**1491**	**531**	1396	577	762	366
1504 VK E	5	**1520**	**428**	**1469**	**472**	1428	509	1366	564	1299	627	702	394
	7	**1607**	**438**	**1554**	**482**	**1510**	**519**	1446	574	1376	637	745	397
	9	**1699**	**448**	**1643**	**492**	**1597**	**529**	**1530**	**585**	832	362	791	401
	11	**1795**	**458**	**1736**	**502**	**1688**	**540**	**1617**	**596**	882	366	839	405

Qo : *Cooling capacity in kW*

P : *Total power*

Fouling factor **:** 0,044 m^2C/kW

XXX *Water T = 5°C*

XXX *Water T = 6°C*

XXX *High pressure offloading operating*

COMPRESSORS AND REFRIGERANT CIRCUITS

TYPE	ECOMAX HE	302 VK 352 VKE	402 VK 422 VKE	442 VK 452 VKE	502 VK 552 VKE	602 VK 652 VKE	702 VK 752 VKE
Compressor type		Semi-hermetic screw					
Number of compressors / Number of circuits		2/2	2/2	2/2	2/2	2/2	2/2
Capacity steps for the unit (1)	%	0-12-25-38-50 62-75-88-100		0-12-25-38-50 62-75-88-100		0-12-25-38-50 62-75-88-100	
Refrigerant charge per circuit	kg a kg b	**a :** 55 **b :** 55	**a :** 86 **b :** 65	**a :** 86 **b :** 86	**a :** 111 **b :** 86	**a :** 111 **b :** 111	**a :** 131 **a :** 131
Oil charge per compressor	l	**all :** 14	**all :** 14	**all :** 14	a : 18 b : 14	**all :** 18	**all :** 18

TYPE	ECOMAX HE	803 VK 853 VKE	953 VK 1003 VKE	1053 VK 1153 VKE	1254VK 1354 VKE	1404 VK 1504 VKE
Compressor type		Semi-hermetic screw				
Number of compressors / Number of circuits		3/3	3/3	3/3	4/4	4/4
Capacity steps for the unit (1)	%	0-12-25-33 -50-58-66-83-92-100	0-16-25-33-50-58-66-83-92-100		0-12-19-25-37 44-50-62-69-75 87-94-100	
Refrigerant charge per circuit	kg	**a** : 131 **b** : 86 **c** : 86	**a** : 111 **b** : 111 **c** : 131	**a** : 111 **b** : 111 **c** : 131	**a** : 111 **b** : 111 **c** : 111	**a** : 111 **b** : 111 **c** : 111
Oil charge per compressor	l	**a** : 18 **b/c** : 14	**all :** 18	**all :** 18	**all :** 18	**all :** 18

EVAPORATORS

TYPE	ECOMAX HE	302 VK 352 VKE	402 VK 422 VKE	442 VK 452 VKE	502 VK 552 VKE	602 VK 652 VKE	702 VK 752 VKE
Number		1					
Water volume	dm^3	82	77	94	109	189	176
Water piping	(1)	DN 150	DN 150	DN 150	DN 200	DN 200	DN 200
Test pressure - Bar	*Water* Refrigerant	15 34	15 34	15 34	15 34	15 34	15 34
Operating pressure - Bar	*Water* Refrigerant	10 17	10 17	10 17	10 17	10 17	10 17

TYPE	ECOMAX HE	803 VK 853 VKE	953 VK 1003 VKE	1053 VK 1153 VKE	1254 VK 1354 VKE	1404 VK 1504 VKE
Number		1				
Water volume	dm^3	176	323	307	307	268
Water piping	(1)	DN 200	DN 250	DN 250	DN 250	DN 250
Test pressure - Bar	*Water* Refrigerant	15 34	15 34	15 34	15 34	15 34
Operating pressure - Bar	*Water* Refrigerant	10 17	10 17	10 17	10 17	10 17

CONDENSERS

TYPE ECOMAX HIGH EFFICIENCY		302 VK 352 VKE	402 VK 422 VKE	442 VK 452 VKE	502 VK 552 VKE	602 VK 652 VKE
Ventilation type		*Axial - Direct coupling 680 tr/mn*				
Fan number		5	7	8	9	10
Air flow rate	m³/h	122 600	169 800	193 600	219 400	245 200
Total input	kW	8,75	12,25	14	15,75	17,5
Each fan nominal load current	A	3,6	3,6	3,6	3,6	3,6

TYPE ECOMAX HIGH AMBIENT		702 VK 752 VK	803 VK 853 VKE	953 VK 1003 VKE	1053 VK 1153 VKE	1254 VK 1354 VKE	1404 VK 1504 VKE
Ventilation type		*Axial - Direct coupling 680 tr/mn*					
Fan number		12	14	16	16	20	20
Air flow rate	m³/h	292 000	339 600	391 200	391 200	490 400	490 400
Total input	kW	21	24,5	28	28	35	35
Each fan nominal load current	A	3,6	3,6	3,6	3,6	3,6	3,6

ELECTRICAL DATA

LENNOX

HIGH EFFICIENCY	302VK	352VKE	402 VK	422VKE	442VK	452VKE	502VK	552VKE	602VK	652VKE	702VK
Maxi power (kW)	141	161	168	184	192	204	229	242	266	280	299
Maxi current (A)	235	267	284	309	328	346	381	407	433	467	499
start-up intensity (Amp)	430	445	570	585	615	625	765	775	820	835	900

HIGH EFFICIENCY	752VKE	803VK	853VKE	953VK	1003VKE	1053VK	1153VKE	1254VK	1354VKE	1404VK	1504VKE
Maxi power (kW)	295	342	352	400	421	445	439	531	559	591	583
Maxi current (A)	495	576	592	652	703	739	733	863	931	979	971
start-up intensity (Amp)	900	975	995	1040	1070	1140	1135	1250	1300	1380	1375

Maximum current and power calculated at 400V/3/50Hz for compressor operation at +12/60°C
Max starting current is when last compressor starts up plus all the remaining system is at full load with all condenser fans running.

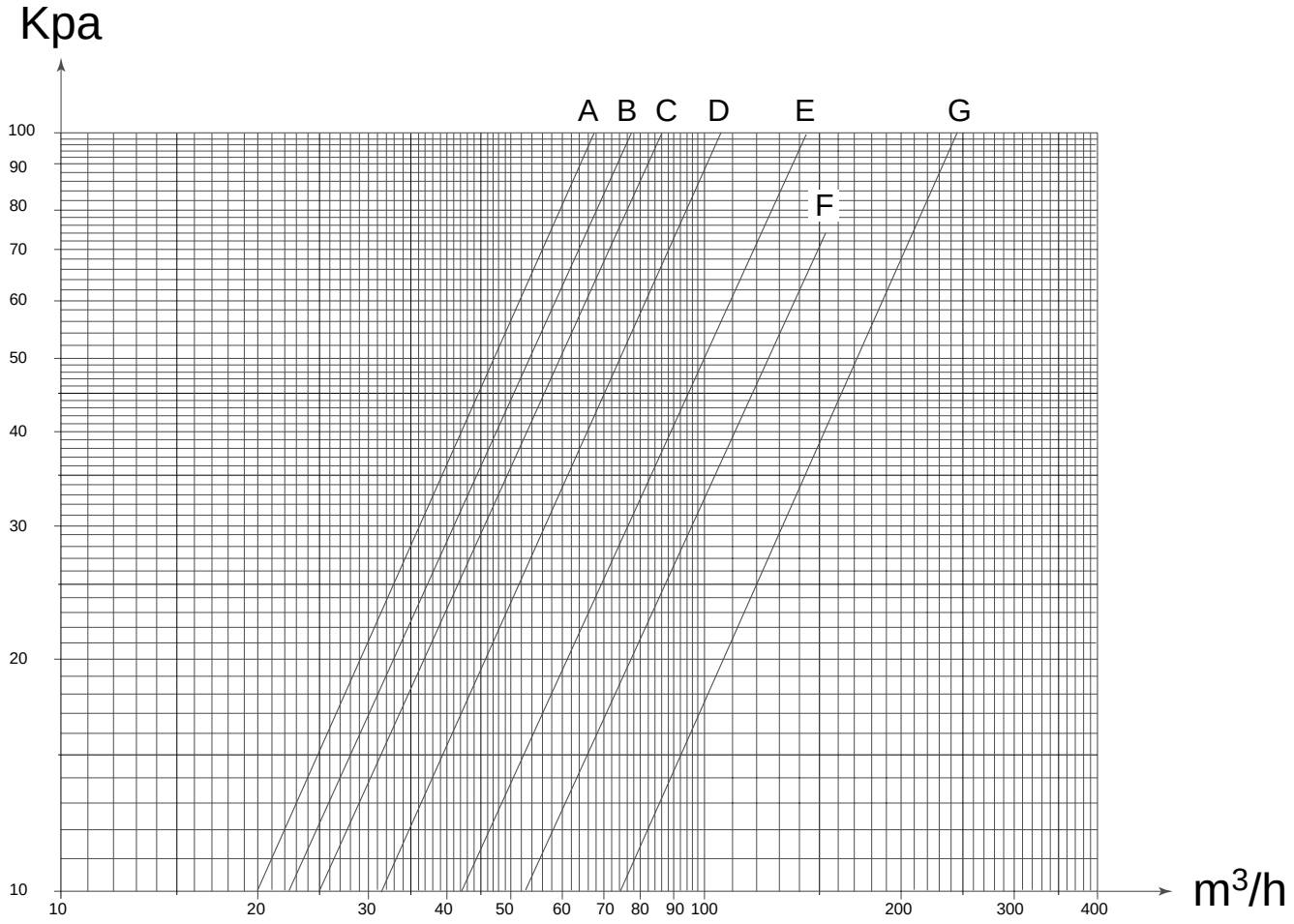

MODEL ECOMAX HE	302VK 352 VKE	402VK 422VKE	442VK 452VKE	502VK 552VKE	602VK 652VKE
Curve	A	B	C	D	E

MODEL ECOMAX HE	702VK 752 VKE	803VK 853VKE	953VK 1003VKE	1053VK 1153VKE	1254VK 1354VKE	1404VK 1504VKE
Curve	F	F	G	G	G	G

Pressure drops are given for informations only. A tolerance of +/- 20kPa must be considered when selecting water pumps.

1 302 VK - 352 VKE

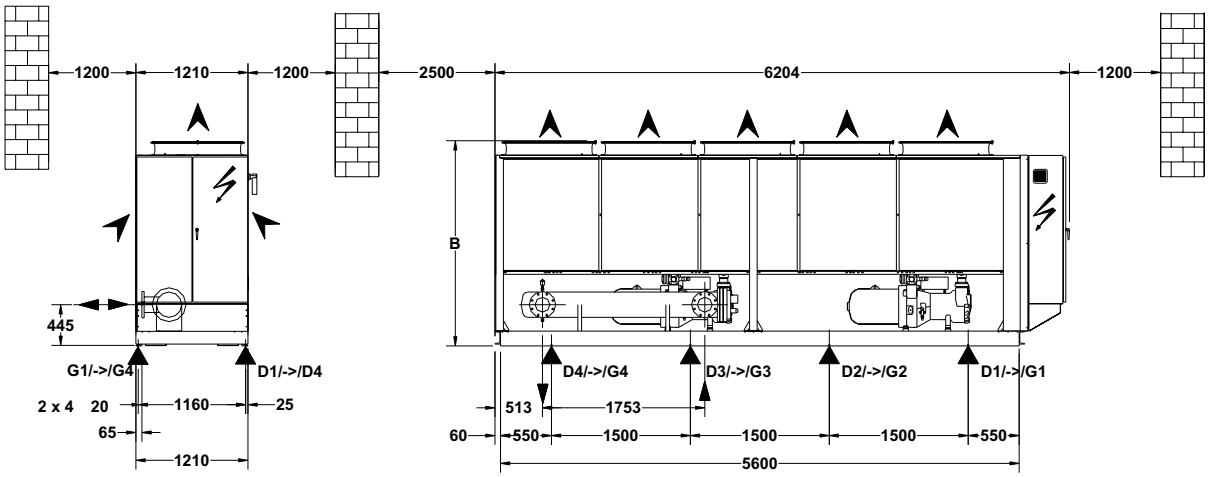

2 402 VK at 1504 VKE

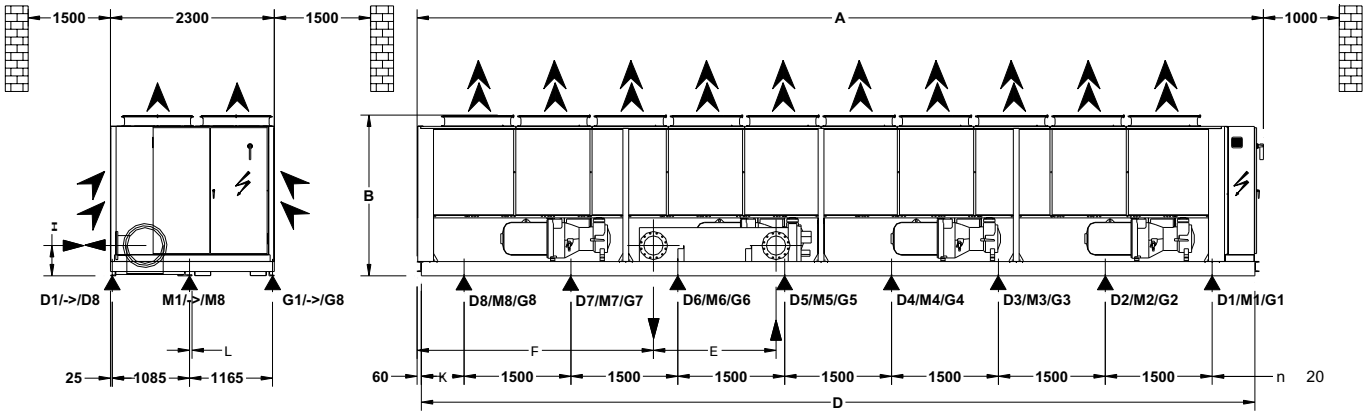

HIGH EFFICIENCY		402VK 422VKE	442VK 452VKE	502VK 552VKE	602VK 652VKE	702VK 752VKE	803VK 853VKE	953VK 1003VKE	1053VK 1153VKE	1254VK 1354VKE	1404VK 1504VKE
Drawings		**2**	**2**	**2**	**2**	**2**	**2**	**2**	**2**	**2**	**2**
A	mm	5050	5050	6260	6260	7458	8460	9670	9670	11880	11880
B	mm	2410	2410	2410	2430	2430	2430	2450	2450	2450	2450
D	mm	4390	4390	5600	5600	6800	8280	9490	9490	11700	11700
E	mm	1753	2253	1723	1724	1724	1724	2224	1721	1721	1721
F	mm	643	263	533	524	2074	3224	3810	3806	3318	3318
H	mm	385	390	405	450	450	450	500	425	425	425
K	mm	695	695	550	550	400	390	245	245	600	600
L	mm	20	20	20	30	30	30	35	35	35	35
n Ø 20		3x3	3x3	3x4	3x4	3x5	3x6	3x7	3x7	3x8	3x8

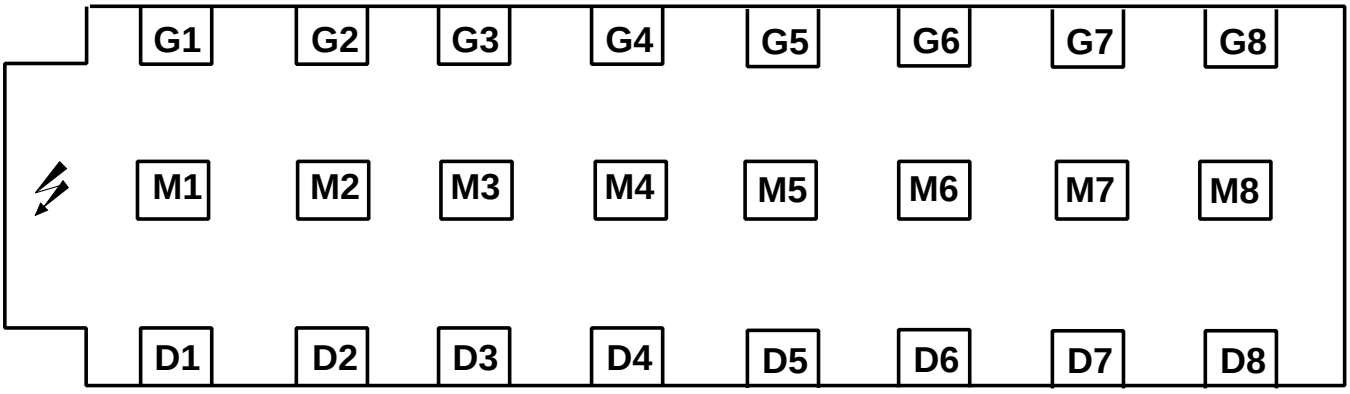

Lennox recommend load distribution as detailed above.
To avoid the M point load, it is possible to support the unit Gi and Di point only. In that case, the new value G'i and D'i will be :

$$G'i = \frac{Gi + Mi}{2}$$

$$D'i = \frac{Di + Mi}{2}$$

HE		302VK 352VKE	402VK 422VKE	442VK 452VKE	502VK 552VKE	602VK 652VKE	702VK 752VKE	803VK 853VKE	953VK 1003VKE	1053VK 1153VKE	1254VK 1354VKE	1404VK 1504VKE
Weight without water	kg	2768	3543	3806	4521	5431	6034	7124	8126	8103	10393	10462
Operating weight	kg	2850	3620	3900	4630	5620	6210	7300	8340	8410	10700	10730
D1	kg	470	440	670	410	670	650	440	450	450	590	590
D2	kg	330	410	390	450	460	470	430	490	490	520	520
D3	kg	320	430	350	420	410	390	430	480	480	480	480
D4	kg	310	-	-	300	430	340	410	460	460	450	450
D5	kg	-	-	-	-	-	220	360	420	420	450	450
D6	kg	-	-	-	-	-	-	210	340	340	440	440
D7	kg	-	-	-	-	-	-	-	190	190	430	440
D8	kg	-	-	-	-	-	-	-	-	-	400	400
M1	kg	-	440	540	430	560	580	500	510	510	660	660
M2	kg	-	440	390	460	440	550	510	540	540	570	570
M3	kg	-	470	460	470	490	530	510	550	550	540	540
M4	kg	-	-	-	430	600	460	520	530	530	520	520
M5	kg	-	-	-	-	-	300	440	540	550	540	540
M6	kg	-	-	-	-	-	-	260	440	450	530	530
M7	kg	-	-	-	-	-	-	-	240	240	490	490
M8	kg	-	-	-	-	-	-	-	-	-	450	450
G1	kg	430	300	330	300	320	370	440	360	360	480	480
G2	kg	270	270	280	200	230	360	430	290	290	290	290
G3	kg	300	420	490	280	360	390	430	280	290	250	250
G4	kg	420	-	-	480	650	340	410	320	330	260	260
G5	kg	-	-	-	-	-	260	360	380	400	340	340
G6	kg	-	-	-	-	-	-	210	320	330	360	370
G7	kg	-	-	-	-	-	-	-	210	210	310	310
G8	kg	-	-	-	-	-	-	-	-	-	350	360

ECOMAX HE	Spectrum per octave band (dBA) 63 Hz	125 Hz	250 Hz	500 Hz	1000 Hz	2000 Hz	4000 Hz	8000 Hz	Global sound power dBA
302VK/352VKE	67	80	87	88	90	89	85	76	**95**
402VK/422VKE	69	81	89	89	91	91	86	77	**97**
442VK/452VKE	69	82	89	90	91	91	86	77	**97**
502VK/552VKE	70	82	90	90	92	92	87	78	**98**
602VK/652VKE	70	83	90	91	92	92	88	79	**98**
702VK/752VKE	71	84	91	92	94	93	88	80	**99**
803VK/853VKE	72	84	92	92	94	94	89	80	**100**
953VK/1003VKE	72	85	92	93	94	94	90	81	**100**
1053VK/1153VKE	72	85	92	93	96	94	90	81	**101**
1254VK/1354VKE	73	86	93	94	95	95	90	82	**101**
1254VK/1354VKE74	73	86	93	94	97	96	91	82	**102**

Global sound power level measured in compliance with ISO standard 3744.
Only the sound power spectrum and the global sound power value are used in determining pressure characteristics at owner land limit.

MODEL ECOMAX	302VK 352VKE	402VK 422VKE	442VK 452VKE	502VK 552VKE	602VK 652VKE	702VK 752VKE	803VK 853VKE	953VK 1003VKE	1053VK 1153VKE	1254VK 1354VKE	1404VK 1504VKE
Leaving chilled water temperature (1)	Minimum : + 5°C / Minimum avec 30% glycol : -10°C Maximum : +12°C										
Chilled water entering temperature	Minimum : (2) Maximum : +20°C										
Difference chilled water inlet/outlet	Minimum : (3) Maximum : +8 °C										
Maximum water flow rate m^3/h	89,3	89,3	89,3	153,5	153,5	153,5	153,5	240	240	240	240

(1) *Below +5°C, add glycol to the heating fluid.*

(2) *Value corresponding to the minimum of 5°C chilled water leaving temperature at considered flow rate*

(3) *Corresponding to the evaporator acceptable maximum flow rate*

APART FROM THESE VALUES, PLEASE CONSULT US

MAXIMUM AMBIENT AIR TEMPERATURE

Temperatures are calculated according to start-up units conditions, with two differents configurations

❶ Full load starting : maxi.conditions (1)

❷ HP offloading operation

Maxi ambient air temperature (°C)

HIGH EFFICIENCY

HE	302VK	352VKE	402 VK	422VKE	442VK	452VKE	502VK	552VKE	602VK	652VKE	702VK
Configuration ❶	45	42,5	47	45	47	45,5	46	44	46	44	46,5
Configuration ❷	51	49,5	52	51	52	51	51,5	50	51,5	51	51,5

Maxi ambient air temperature (°C)

HE	752VKE	803VK	853VKE	953VK	1003VKE	1053VK	1153VKE	1254VK	1354VKE	1404VK	1504VKE
Configuration ❶	45	46,5	45	46	44	44	42,5	46	44	44	42,5
Configuration ❷	51	51,5	51	51,5	50	50,5	49,5	51,5	50	50,5	49,5

(1) : Operating limits R407C : 11°C/60°C

EcoMax

High Ambient

CONTENTS

ECOMAX HA unit

EcoMax High Ambient

The EcoMax high ambient range of chillers is engineered to operate at the high ambient conditions in the Middle East and North Africa. The high ambient units can also be utilized when the application or positioning of the chillers result in the chiller being exposed to high condenser supply air temperatures. The EcoMax high ambient range utilises the same components as the EcoMax standard range. Additional condenser coil surface is used together with 950rpm condenser fans are used to enhance performance for high ambient operation. The use of rotary screw chillers with suction gas cooled motors with liquid injection guarantees long motor life in high ambient conditions.

The rotary screw compressors have low vibration and noise levels and require very little service throughout the compressor lifetime. Lubrication system is completely self-contained within the compressor, no external oil separator or oil cooler is required. The low speed operation of the compressor, together with the superior oil management, ensure that the compressor performance is maintained and the compressor requires only periodic service every 3 to 5 years The Climatic II controller is supplied as standard with the KP02 controller. The power and control panel is ventilated via a thermostatically controlled IP55 ventilation fan. This helps prevent electrical components from over heating. The Condenser coil is easily cleanable so that sand and debris can be washed away. The combination of Climatic II and the Expansion valve technology allows the chillers to start under high ambient conditions (52°C) and high chilled water temperatures are an important feature for high ambient operation. The full range is able to operate at full load conditions with standard chilled water temperatures in ambient as high as 50°C. The high ambient range is subject to the same demanding quality and factory testing requirements as the rest of the EcoMax range.

ECOMAX HA unit with anti intrusion grill

ECOMAX HA	Water outlet temp. °C	Air inlet temperature															
		30 °C		35 °C		38 °C		42°C		46 °C		48 °C		50 °C		52 °C	
		Qo	Pa	Qo	Pa	Qo	Pa	Qo	Pa	Qo	Pa	Qo	Pa	Qo	Pa	Qo	Pa
302 VK	5	329	103	307	112	292	118	272	126	250	136	226	146	200	150	***126***	***97***
	7	352	106	329	115	313	120	292	129	270	139	236	149	210	153	***136***	***98***
	9	375	108	351	117	336	123	313	132	290	142	246	152	220	156	***148***	***100***
	11	400	111	375	120	358	126	335	135	313	145	256	155	230	159	***160***	***101***
352 VK E	5	359	116	342	130	331	139	314	153	292	163	270	173	***159***	***96***	***153***	***118***
	7	382	118	364	132	353	142	335	156	313	166	291	176	***171***	***97***	-	-
	9	405	121	387	135	375	145	356	159	334	169	***188***	***93***	***183***	***98***	-	-
	11	429	123	411	137	398	147	379	162	357	172	***201***	***94***	***195***	***99***	-	-
402 VK	5	385	121	361	131	345	138	323	149	300	161	288	169	265	173	***150***	***117***
	7	411	123	386	134	370	141	347	151	322	163	310	172	287	176	***162***	***118***
	9	439	126	412	137	395	144	371	154	346	166	330	175	***183***	***92***	***175***	***120***
	11	467	129	439	139	422	146	396	157	370	169	352	178	***197***	***93***	***189***	***121***
422 VK E	5	411	130	393	145	382	155	364	170	345	185	324	200	***183***	***105***	***177***	***135***
	7	436	132	418	147	406	157	388	173	368	188	348	203	***196***	***106***	***190***	***136***
	9	462	134	443	149	431	160	412	175	391	191	***215***	***101***	***209***	***107***	***202***	***137***
	11	489	137	470	152	456	162	437	178	415	194	***229***	***102***	***222***	***108***	***216***	***138***
442 VK	5	435	138	409	150	392	159	369	171	344	185	331	199	317	214	***173***	***135***
	7	464	140	437	153	420	162	395	174	369	189	355	202	342	217	***187***	***136***
	9	495	143	466	156	448	165	422	177	395	192	379	205	***209***	***106***	***201***	***138***
	11	527	147	496	159	477	168	450	180	421	195	402	208	***224***	***108***	***216***	***140***
452 VK E	5	456	145	438	161	426	173	408	190	387	210	366	220	341	230	***200***	***151***
	7	484	147	465	164	452	175	433	193	412	213	391	223	***219***	***118***	***213***	***152***
	9	513	149	493	166	479	178	459	195	437	216	416	226	***233***	***119***	***226***	***153***
	11	**542**	**152**	521	169	507	180	486	198	463	218	430	229	***248***	***120***	***241***	***154***
502 VK	5	529	164	495	179	474	189	443	203	410	218	393	223	370	238	***204***	***157***
	7	565	168	530	183	507	192	475	206	440	222	423	226	400	240	***221***	***159***
	9	603	172	565	186	541	196	508	210	472	226	454	229	***249***	***125***	***239***	***161***
	11	641	176	602	190	577	200	541	214	504	230	485	232	***268***	***127***	***257***	***163***
552 VK E	5	564	178	539	201	522	216	497	238	469	263	454	273	430	285	***241***	***187***
	7	598	181	572	204	555	219	529	242	500	267	485	276	***266***	***149***	***257***	***188***
	9	633	185	606	207	588	222	561	245	532	270	***293***	***142***	***284***	***151***	***275***	***190***
	11	670	188	641	210	622	225	594	248	564	273	***325***	***143***	***302***	***152***	-	-
602 VK	5	628	191	587	208	560	219	522	235	481	251	459	267	447	280	***238***	***179***
	7	671	196	627	213	599	224	559	239	517	256	495	272	483	283	***259***	***182***
	9	715	201	669	218	640	229	598	244	555	261	532	277	***293***	***145***	***280***	***184***
	11	761	206	713	222	682	233	639	249	593	266	568	282	***315***	***148***	***301***	***187***
652 VK E	5	677	213	645	241	624	259	592	287	556	318	538	323	520	338	***284***	***223***
	7	718	217	685	244	663	263	630	291	594	321	576	327	***316***	***181***	***305***	***225***
	9	760	220	726	248	703	267	669	295	632	325	***348***	***171***	***338***	***182***	-	-
	11	804	224	768	252	744	271	709	299	650	329	***370***	***172***	***359***	***184***	-	-
702 VK	5	718	217	673	236	645	250	605	269	562	292	540	265	520	278	***281***	***210***
	7	766	222	719	241	689	255	647	274	603	297	582	270	562	282	***303***	***212***
	9	817	227	767	246	735	259	691	279	645	302	625	275	604	287	***327***	***215***
	11	869	232	816	251	783	264	737	285	688	308	688	281	***364***	***170***	***350***	***218***

XXX *Water T = 5°C*

XXX *Water T = 6°C*

XXX *High pressure offloading operating*

Qo : *Cooling capacity in kW*

P : *Total power*

Fouling factor **:** 0,044 m^2C/kW

ECOMAX HA	Water outlet temp. °C	Air inlet temperature															
		30 °C		35 °C		38 °C		42°C		46 °C		48 °C		50 °C		52 °C	
		Qo	Pa	Qo	Pa	Qo	Pa	Qo	Pa	Qo	Pa	Qo	Pa	Qo	Pa	Qo	Pa
752 VK E	5	756	229	725	256	704	274	674	302	640	333	623	348	606	350	328	236
	7	802	233	769	260	747	278	715	306	680	337	660	353	360	186	349	237
	9	848	237	814	264	791	282	758	310	721	341	393	177	382	188	371	238
	11	896	241	860	268	836	286	801	314	764	345	416	179	405	189	394	240
803 VK	5	804	245	755	268	723	283	679	305	632	331	608	343	584	356	317	239
	7	859	251	807	273	774	288	727	311	678	336	654	348	630	361	342	242
	9	915	256	861	279	826	294	777	316	726	342	700	354	676	367	368	245
	11	974	262	916	284	879	299	828	322	774	348	746	360	411	192	395	248
853 VK E	5	846	259	812	289	789	310	755	341	717	376	687	389	657	404	368	268
	7	897	263	861	293	837	314	801	345	762	381	732	394	404	211	392	270
	9	950	267	912	298	887	318	849	350	808	386	442	201	430	213	417	272
	11	1004	272	964	302	937	323	898	354	852	390	468	203	456	215	443	274
953 VK	5	951	286	890	312	850	328	793	352	732	376	700	388	670	400	365	270
	7	1016	293	952	319	910	335	851	358	788	383	756	392	726	406	396	274
	9	1084	300	1016	325	972	342	911	365	845	391	813	400	783	412	428	278
	11	1154	307	1082	332	1037	348	972	372	905	398	860	408	481	220	461	282
1003 VK E	5	1023	317	977	358	946	386	899	427	847	472	820	495	794	517	435	335
	7	1085	322	1038	363	1005	391	957	433	903	480	860	502	483	268	466	338
	9	1150	328	1100	369	1066	397	1016	439	961	488	531	254	515	271	-	-
	11	1217	333	1164	374	1129	402	1077	444	1022	496	565	256	549	272	-	-
1053 VK	5	1073	324	1006	354	963	375	903	405	851	440	825	457	800	474	424	312
	7	1145	331	1074	362	1029	382	966	413	911	448	885	465	478	250	457	316
	9	1219	339	1144	370	1097	390	1030	421	970	456	533	242	513	254	492	320
	11	1295	347	1216	377	1166	398	1097	429	1030	464	571	246	550	259	-	-
1153 VK E	5	1135	345	1088	387	1056	415	1009	458	957	503	931	525	511	283	-	-
	7	1203	351	1153	393	1119	422	1071	465	1019	601	559	269	544	285	-	-
	9	1272	358	1220	400	1185	429	1134	471	1082	610	594	271	578	287	-	-
	11	1344	364	1288	406	1251	435	1198	478	1144	618	629	274	612	290	-	-
1254 VK	5	1236	378	1157	413	1106	435	1033	466	954	499	914	516	875	532	480	357
	7	1321	387	1238	421	1184	444	1107	475	1026	509	994	526	959	542	521	362
	9	1408	396	1321	430	1264	453	1185	484	1100	518	1078	536	589	289	563	368
	11	1498	406	1406	440	1347	462	1265	493	1177	528	1155	546	633	294	607	373
1354 VK E	5	1331	421	1272	477	1231	514	1170	569	1102	631	1068	662	1034	693	573	445
	7	1413	429	1351	484	1309	522	1245	578	1175	641	1131	672	636	361	614	449
	9	1497	436	1432	492	1388	530	1323	587	1248	652	699	342	678	364	-	-
	11	1583	444	1516	499	1469	537	1402	595	1320	662	744	344	723	367	-	-
1404 VK	5	1430	433	1340	474	1282	501	1200	542	1114	589	1071	611	1028	633	565	414
	7	1524	443	1428	484	1367	511	1282	553	1192	600	1150	622	635	337	608	420
	9	1623	454	1522	494	1458	522	1369	564	1270	611	1230	633	683	342	655	426
	11	1726	465	1620	506	1553	534	1460	576	1348	622	762	332	733	348	-	-
1504 VK E	5	1516	463	1451	519	1407	558	1344	616	1276	672	1242	700	1210	728	-	-
	7	1604	471	1536	528	1490	567	1424	625	1356	683	1322	711	724	384	-	-
	9	1697	480	1625	537	1577	576	1508	635	1436	694	791	366	770	387	-	-
	11	1794	490	1719	547	1668	586	1596	644	1516	705	840	369	817	390	-	-

Qo : *Cooling capacity in kW*

P : *Total power*

Fouling factor **:** 0,044 m^2C/kW

XXX *Water T = 5°C*

XXX *Water T = 6°C*

XXX *High pressure offloading operating*

COMPRESSORS AND REFRIGERANT CIRCUITS

TYPE	ECOMAX HA	302 VK 352 VKE	402 VK 422 VKE	442 VK 452 VKE	502 VK 552 VKE	602 VK 652 VKE	702 VK 752 VKE
Compressor type		Semi-hermetic screw					
Number of compressors / Number of circuits		2/2	2/2	2/2	2/2	2/2	2/2
Capacity steps for the unit (1)	%	0-12-25-38-50 62-75-88-100		0-12-25-38-50 62-75-88-100		0-12-25-38-50 62-75-88-100	
Refrigerant charge per circuit	***circuit*** kg	**a :** 55 **b :** 55	**a :** 86 **b :** 65	**a :** 86 **b :** 86	**a :** 111 **b :** 86	**a :** 111 **b :** 111	**a :** 131 **b :** 131
Oil charge per compressor	l	14	14	14	a : 18 b : 14	18	18

TYPE	ECOMAX HA		803 VK 853 VKE	953 VK 1003 VKE	1053 VK 1153 VKE	1254VK 1354 VKE	1404 VK 1504 VKE
Compressor type			Semi-hermetic screw				
Number of compressors / Number of circuits			3/3	3/3	3/3	4/4	4/4
Capacity steps for the unit (1)	%		0-12-25-33 -50-58-66-83- 92-100	0-16-25-33-50-58- 66-83-92-100		0-12-19-25-37 44-50-62-69-75 87-94-100	
Refrigerant charge per circuit	***circuit*** kg	**a** **b** **c**	**a** : 131 **b** : 86 **c** : 86	**a** : 111 **b** : 111 **b** : 131	**a** : 111 **b** : 111 **b** : 131	**all** : 111	**all** : 111
Oil charge per compressor	l		**a** : 18 **c/b** : 14	**all :** 18	**all :** 18	**all :** 18	**all :** 18

EVAPORATORS

TYPE	ECOMAX	302 VK 352 VKE	402 VK 422 VKE	442 VK 452 VKE	502 VK 552 VKE	602 VK 652 VKE	702 VK 752 VKE
Number		1					
Water volume	dm^3	82	77	94	109	189	176
Water piping	(1)	DN 150	DN 150	DN 150	DN 200	DN 200	DN 200
Test pressure - Bar	*Water* Refrigerant	15 34	15 34	15 34	15 34	15 34	15 34
Operating pressure - Bar	*Water* Refrigerant	10 17	10 17	10 17	10 17	10 17	10 17

TYPE	ECOMAX	803 VK 853 VKE	953 VK 1003 VKE	1053 VK 1153 VKE	1254 VK 1354 VKE	1404 VK 1504 VKE
Number		1				
Water volume	dm^3	176	323	307	307	268
Water piping	(1)	DN 200	DN 250	DN 250	DN 250	DN 250
Test pressure - Bar	*Water* Refrigerant	15 34	15 34	15 34	15 34	15 34
Operating pressure - Bar	*Water* Refrigerant	10 17	10 17	10 17	10 17	10 17

(1) : PN 16 flanges

CONDENSERS

TYPE	ECOMAX HIGH AMBIENT	302 VK 352 VKE	402 VK 422 VKE	442 VK 452 VKE	502 VK 552 VKE	602 VK 652 VKE
Ventilation type		*Axial - Direct coupling 950 tr/mn*				
Fan number		5	7	8	9	10
Air flow rate	m³/h	152 600	211 600	241 200	273 200	305 200
Total input	kW	16,5	23,1	26,4	29,7	33
Each fan nominal load current	A	6,2	6,2	6,2	6,2	6,2

TYPE	ECOMAX HIGH AMBIENT	702 VK 752 VK	803 VK 853 VKE	953 VK 1003 VKE	1053 VK 1153 VKE	1254 VK 1354 VKE	1404 VK 1504 VKE
Ventilation type		*Axial - Direct coupling 950 tr/mn*					
Fan number		12	14	16	16	20	20
Air flow rate	m³/h	364 000	423 200	487 200	487 200	610 400	610 400
Total input	kW	39,6	46,2	52,8	52,8	66	66
Each fan nominal load current	A	6,2	6,2	6,2	6,2	6,2	6,2

ELECTRICAL DATA

LENNOX

HIGH AMBIENT	302VK	352VKE	402 VK	422VKE	442VK	452VKE	502VK	552VKE	602VK	652VKE	702VK
Maxi power (kW)	149	169	179	195	205	217	243	256	281	295	318
Maxi current (A)	248	280	302	327	349	367	404	430	459	493	530
start-up intensity (Amp)	460	475	605	625	655	665	810	815	865	880	950

HIGH AMBIENT	752VKE	803VK	853VKE	953VK	1003VKE	1053VK	1153VKE	1254VK	1354VKE	1404VK	1504VKE
Maxi power (kW)	314	364	374	425	446	470	464	562	590	622	614
Maxi current (A)	526	612	628	694	745	781	775	915	983	1031	1023
start-up intensity (Amp)	945	1030	1050	1100	1130	1200	1195	1320	1370	1450	1445

Maximum current and power calculated at 400V/3/50Hz for compressor operation at +12/60°C
Max starting current is when last compressor starts up plus all the remaining system is at full load with all condenser fans running.

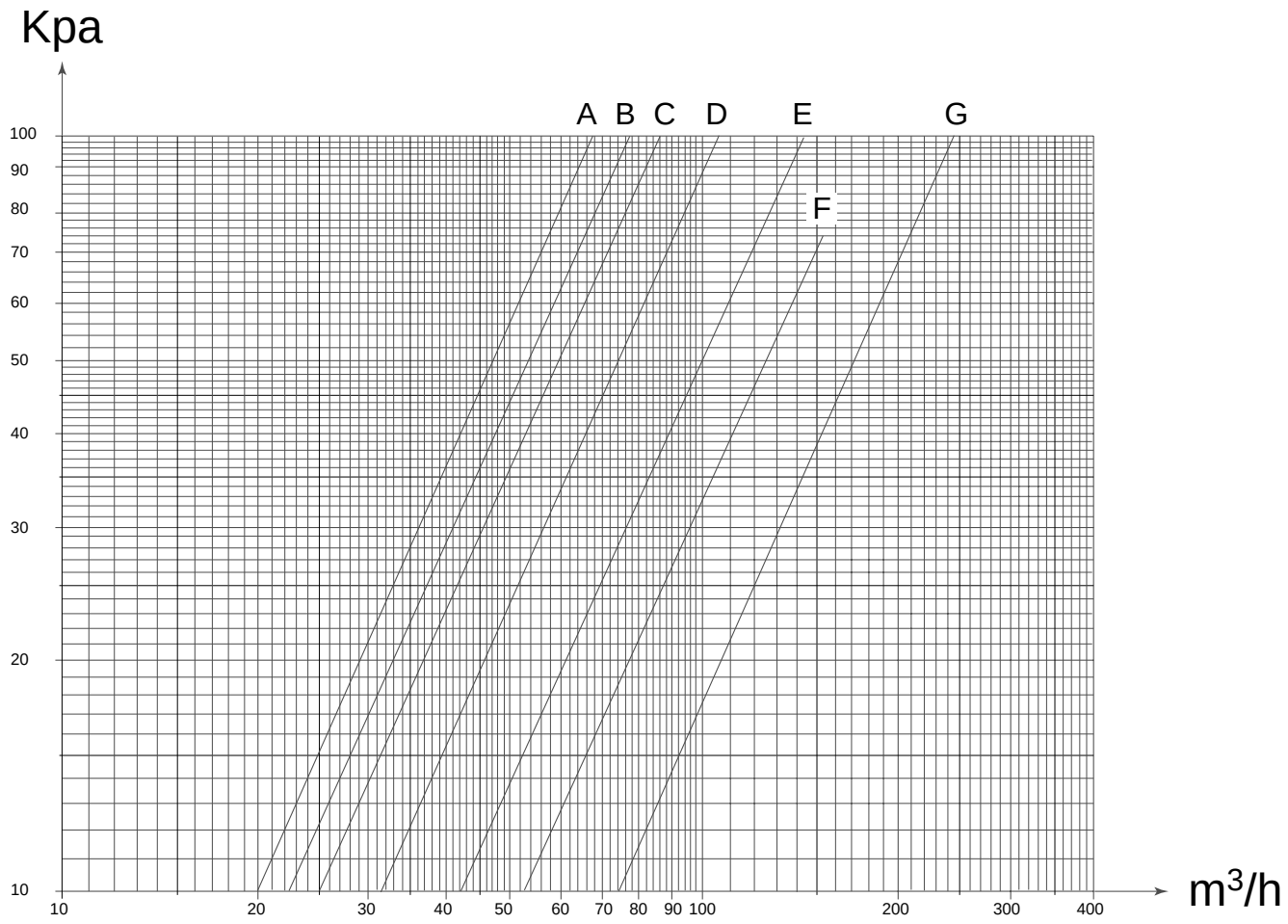

MODEL ECOMAX HA	302VK 352 VKE	402VK 422VKE	442VK 452VKE	502VK 552VKE	602VK 652VKE
Curve	A	B	C	D	E

MODEL ECOMAX HA	702VK 752 VKE	803VK 853VKE	953VK 1003VKE	1053VK 1153VKE	1254VK 1354VKE	1404VK 1504VKE
Curve	F	F	G	G	G	G

Pressure drops are given for informations only. A tolerance of +/- 20kPa must be considered when selecting water pumps.

1 302 VK - 352 VKE

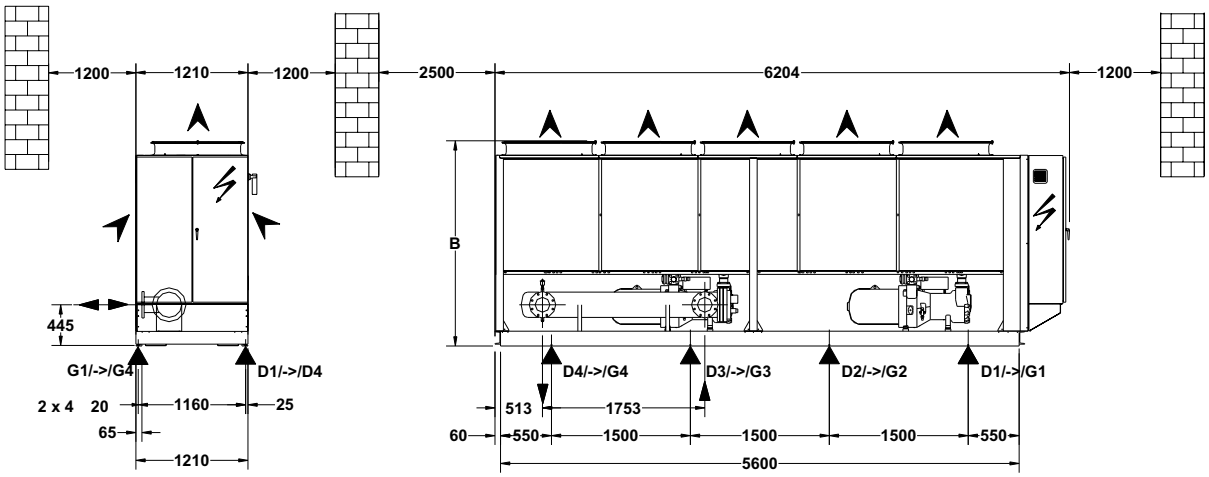

2 402 VK at 1504 VKE

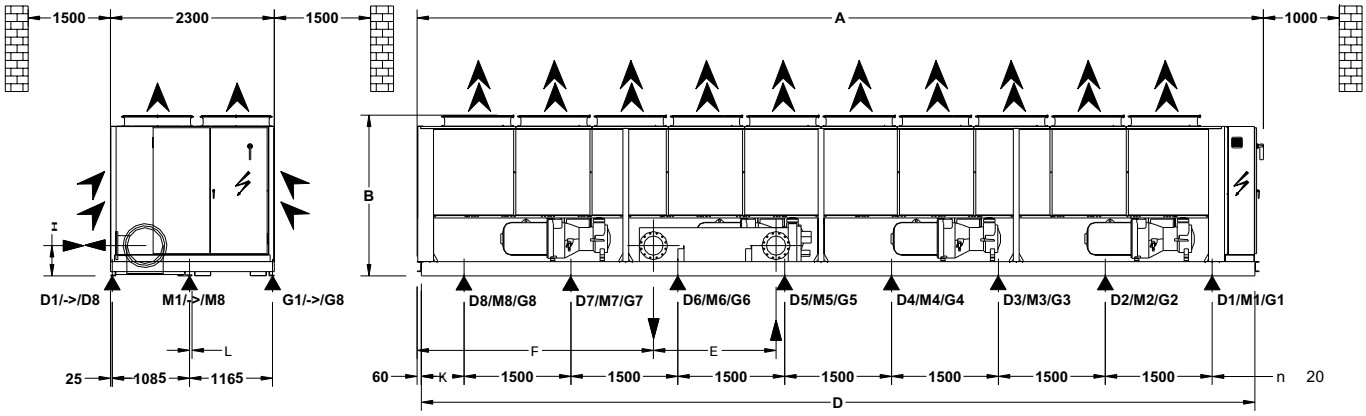

HIGH AMBIENT		402VK 422VKE	442VK 452VKE	502VK 552VKE	602VK 652VKE	702VK 752VKE	803VK 853VKE	953VK 1003VKE	1053VK 1153VKE	1254VK 1354VKE	1404VK 1504VKE
Drawings		**2**	**2**	**2**	**2**	**2**	**2**	**2**	**2**	**2**	**2**
A	mm	5050	5050	6260	6260	7458	8460	9670	9670	11880	11880
B	mm	2213	2213	2213	2233	2233	2233	2253	2253	2253	2253
D	mm	4390	4390	5600	5600	6800	8280	9490	9490	11700	11700
E	mm	1753	2253	1723	1724	1724	1724	2224	1721	1721	1721
F	mm	643	263	533	524	2074	3224	3810	3806	3318	3318
H	mm	385	390	405	450	450	450	500	425	425	425
K	mm	695	695	550	550	400	390	245	245	600	600
L	mm	20	20	20	30	30	30	35	35	35	35
n Ø 20		3x3	3x3	3x4	3x4	3x5	3x6	3x7	3x7	3x8	3x8

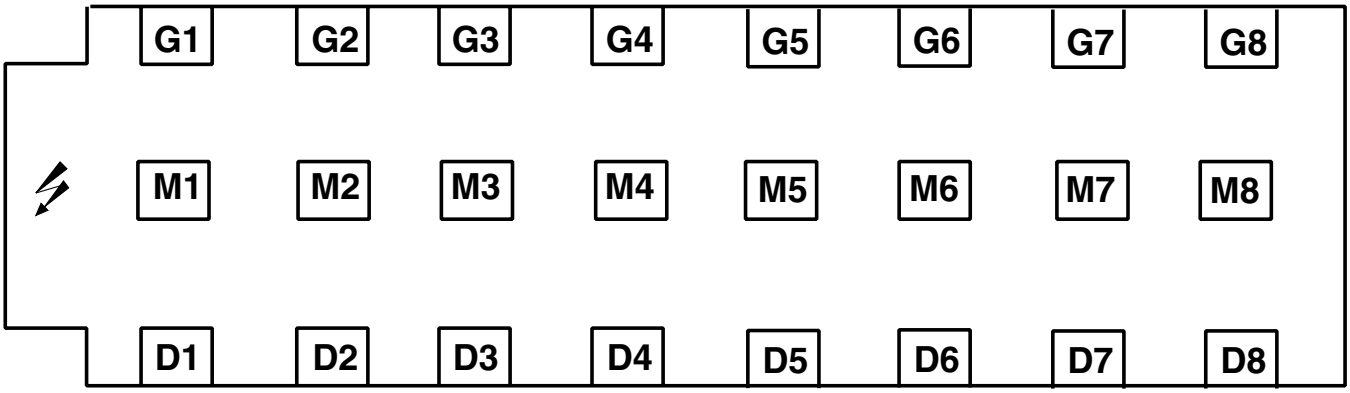

Lennox recommend load distribution as detailed above.
To avoid the M point load, it is possible to support the unit Gi and Di point only. In that case, the new value G'i and D'i will be :

$$G'i = \frac{Gi + Mi}{2}$$

$$D'i = \frac{Di + Mi}{2}$$

HA		302VK 352VKE	402VK 422VKE	442VK 452VKE	502VK 552VKE	602VK 652VKE	702VK 752VKE	803VK 853VKE	953VK 1003VKE	1053VK 1153VKE	1254VK 1354VKE	1404VK 1504VKE
Weight without water	kg	2748	3523	3766	4511	5421	6004	6694	9226	9233	10333	10402
Operating weight	kg	2830	3600	3860	4620	5610	6180	6870	9440	9540	10640	10670
D1	kg	470	440	660	410	670	650	440	440	440	590	590
D2	kg	330	410	380	450	460	470	430	490	490	510	510
D3	kg	320	420	350	420	410	390	420	480	480	480	480
D4	kg	300	-	-	300	430	340	410	460	460	450	450
D5	kg	-	-	-	-	-	220	350	420	420	450	450
D6	kg	-	-	-	-	-	-	200	340	340	440	440
D7	kg	-	-	-	-	-	-	-	190	210	430	430
D8	kg	-	-	-	-	-	-	-	-	-	390	400
M1	kg	-	440	540	430	560	580	500	500	500	650	650
M2	kg	-	440	390	460	440	540	500	540	540	570	570
M3	kg	-	470	460	460	480	530	500	540	550	530	530
M4	kg	-	-	-	430	600	450	510	530	530	520	520
M5	kg	-	-	-	-	-	300	440	530	540	540	540
M6	kg	-	-	-	-	-	-	260	430	440	530	530
M7	kg	-	-	-	-	-	-	-	240	240	480	490
M8	kg	-	-	-	-	-	-	-	-	-	440	450
G1	kg	430	300	320	300	320	360	340	500	500	470	470
G2	kg	270	270	280	200	230	360	300	540	540	290	290
G3	kg	300	410	480	280	360	390	330	540	540	250	250
G4	kg	410	-	-	480	650	340	390	530	540	260	250
G5	kg	-	-	-	-	-	260	320	530	550	340	340
G6	kg	-	-	-	-	-	-	230	430	450	370	370
G7	kg	-	-	-	-	-	-	-	240	240	310	310
G8	kg	-	-	-	-	-	-	-	-	-	350	360

ECOMAX HA	Spectrum per octave band (dBA)								Global sound power
HIGH AMBIENT	63 Hz	125 Hz	250 Hz	500 Hz	1000 Hz	2000 Hz	4000 Hz	8000 Hz	dBA
302VK/352VKE	74	86	95	96	96	95	89	84	**102**
402VK/422VKE	76	88	97	98	97	96	90	85	**103**
442VK/452VKE	76	88	97	98	98	97	91	86	**104**
502VK/552VKE	77	89	98	99	98	98	92	86	**105**
602VK/652VKE	77	89	98	99	98	98	92	87	**105**
702VK/752VKE	78	90	99	100	100	99	93	88	**106**
803VK/853VKE	79	91	100	101	100	100	93	88	**107**
953VK/1003VKE	79	91	100	102	101	100	94	89	**107**
1053VK/1153VKE	79	91	100	102	101	100	94	89	**107**
1254VK/1354VKE	80	92	101	102	102	101	95	90	**108**
1254VK/1354VKE74	80	92	101	102	102	101	95	90	**108**

Global sound power level measured in compliance with ISO standard 3744.
Only the sound power spectrum and the global sound power value are used in determining pressure characteristics at owner land limit.

MODEL ECOMAX	302VK 352VKE	402VK 422VKE	442VK 452VKE	502VK 552VKE	602VK 652VKE	702VK 752VKE	803VK 853VKE	953VK 1003VKE	1053VK 1153VKE	1254VK 1354VKE	1404VK 1504VKE
Leaving chilled water temperature (1)	Minimum : + 5°C / Minimum avec 30% glycol : -10°C Maximum : +12°C										
Chilled water entering temperature	Minimum : (2) Maximum : +20°C										
Difference chilled water inlet/outlet	Minimum : (3) Maximum : +8 °C										
Maximum water flow rate m³/h	89,3	89,3	89,3	153,5	153,5	153,5	153,5	240	240	240	240

(1) *Below +5°C, add glycol to the heating fluid.*

(2) *Value corresponding to the minimum of 5°C chilled water leaving temperature at considered flow rate*

(3) *Corresponding to the evaporator acceptable maximum flow rate*

APART FROM THESE VALUES, PLEASE CONSULT US

MAXIMUM AMBIENT AIR TEMPERATURE

Temperatures are calculated according to start-up units conditions, with two differents configurations

❶ Full load starting : maxi.conditions (1)

❷ HP offloading operation

Maxi ambient air temperature (°C)

HA		302VK	352VKE	402 VK	422VKE	442VK	452VKE	502VK	552VKE	602VK	652VKE 702VK
Configuration ❶	46,5	44,5	48,5	46,5	48,5	47	47,5	45,5	47,5	45,5	48
Configuration ❷	52	52	53,5	52	53,5	52	52	52	52	52	52,5

Maxi ambient air temperature (°C)

HA	752VKE	803VK	853VKE	953VK	1003VKE	1053VK	1153VKE	1254VK	1354VKE	1404VK	1504VKE
Configuration ❶	46,5	48	46,5	47,5	45,5	46	44,5	47,5	45,5	46	44,5
Configuration ❷	52	52,5	52	52	52	52	52	52	52	52	52

(1) : Operating limits R407C : 11°C/60°C

To supply and install, where specified in the project n° …. unit(s) air-cooled water chiller with cooling capacity of …. kW, to cool …. m3/sec. of water from …. °C to …. working with …. °C ambient temperature. The unit should work with electricity at …. V. 3ph. 50Hz. The electrical power absorbed should not overcome …. kW. The units COP will be at least …. at the working conditions of the project. Part load COP will be at least …. at the working conditions of the project. For the units with 2, 3 and 4 compressors the chillers will have (2), (3) or (4) independent refrigerant circuits, with the respective electronic microprocessor will allow the starting of the compressors and the control of the chiller. Each chiller will be factory assembled on a robust base frame made of zinc coated steel, protected by an epoxy coated paint, with zinc coated steel panels. The unit will be tested in the factory at the nominal working conditions and water temperatures. Before shipment a full refrigerant test will be held to avoid any losses, and the units will be filled with oil and …… refrigerant.

General

Units are leak and pressure-tested at 24.5 bars (350 psi) high side and 14 bars (200 psi) low side, and then evacuated and charged. Packaged units ship with a full operating charge of oil and refrigerant. Unit panels, structural elements, and control boxes are constructed of 1.5 to 3 mm (11 to 16 gauge) galvanized sheet metal. The chiller is constructed on a solid rugged base frame constructed of sectional steel beams welded together to form a ridged base. The base is structurally able to carry the unit weight and is torsion ally ridged with no vibrating sections. The base is hot dipped galvanised for corrosion protection. The chiller is lifted, moved and mounted via the base frame that contains AVM mounting and lifting points as standard. Unit panels and control boxes are finished with baked-on powder paint, and the structural-steel base is finished with an air-dry paint. The unit is painted to RAL 9002 as standard. The unit will have one single DX evaporator with 2, 3 or 4 independent refrigerant circuits the evaporator water connections are flanged as standard. All the internal surfaces are coated in a clear urethane lacquer to protect the insulation and pipework. The units must be constructed to meet European regulations and standards specifically EN 60204-1, NR 2037/2000, ISO9001, ISO 3744 & Eurovent certification performance standards and current CE standard.

Compressors

2, 3 or 4 Semi hermetic twin-screw helical rotor compressors are used each in a individual refrigerant circuit. The compressor motors shall be hermetically sealed squirrel cage induction type cooled by suction gas with an oversized suction filter with a fine mesh. The compressors will have a part wind starting system with windings selected to have low inrush current starting characteristics. The compressor power factor will be 0.9 or greater. The compressor rotors shall be enclosed in a double wall pressure-compensated rotor housing to ensure pressure stability and low noise operation.

The support bearings will be robust axial bearings mounted in tandem with pressure unloading and sealed in isolated chambers for lubrication efficiency. Open type single roller bearings are not acceptable. The force lubrication will be by pressure differential and the oil will be filtered through a 10µm filter. Oil separation will be internal in the compressor and will be a three stage process. External oil separation is not acceptable. The compressor will have automatic start unloading and will have 4 steps of capacity control with Vi compensation. The economizer option will have a sliding suction position port to maximize capacity and efficiency. The compressor will be equipped with a discharge check valve, oil sight glass, oil heater, oil service valve and an internal pressure relief system. The compressors must be mounted on vibration isolation pads to reduce noise transmission.

Evaporator

The single evaporator is a tube-in-shell heat exchanger design, with internally finned copper tubes roller-expanded into the tube sheet. The evaporator is designed, tested, and stamped in accordance with the appropriate pressure-vessel code approval. The evaporator is designed for a waterside working pressure of 10 bars (146 psi) and refrigerant side 17 bars (250psi). Water connections are flanged for simple site connection the water connections must be sealed for shipping. Each shell includes an automatic air vent, a drain, and fittings for temperature control sensors, and is insulated with 13mm (1/2 inch) (K-0.26). Optional evaporator heaters with thermostats are provided to protect the evaporator from freezing at ambient temperatures down to -20°C (-13°F). The evaporator is designed to operate with a flow detection device. Options are for a paddle type (supplied loose fitting by others) or a factory fitted differential pressure type switch. The evaporator will have 2, 3 or 4 independent refrigerant circuits.

Condenser coil

The condenser coils are constructed with internally enhanced seamless copper tubes having an "W" configuration and arranged in a staggered row pattern and mechanically expanded into rippled aluminum fins with full fin collars for higher efficiencies. A collar that will increase the surface area in connection with the tubes, protecting them from ambient corrosion, gives the spacing between the fins. The coils have to be washable to maintain operating efficiency. The coils has an integral subcooler circuit which provides sufficient subcooling to effectively eliminate the possibility of liquid flashing and increase the unit's efficiency of 5 to 7% without an increase in power absorbed, and the surface area will be dimensioned in a way to permit a law air velocity.

Condenser fans

The condenser fans are direct drive vertical discharge Hushtone helical type with multiple aerofoil blades for higher efficiencies and lower noise. The fan blade will be of the sickle end type mounted in a bell mouth orifice. The air discharge is vertical and each fan will be coupled to the electrical motor, supplied as standard to IP55 class "F" insulation and capable to work to ambient temperatures of -20°C to + 55°C max humidity 80%. The fans are direct driven via a three phase motor with permanently lubricated ball bearings. The motors are designed for external operation and are available in 3 different speeds with the option of two-speed motor.

Control panel

Field power connection, controls interlock terminals, and unit control system shall be centrally located in a IP55 weatherproof cabinet accessible through a key locked door. Power and starting controls shall be separate from safety and operating controls in different compartments of the same panel. All 3-phase connections shall be fully shrouded to prevent accidental contact. Power and starting controls shall include lockable individual thermal overloads and contactors for each compressor winding and fan motors. Operating and safety controls shall be via Climatic II plus solid-state protection for compressor motor; high and low pressure cut-out switch (for each refrigerant circuit); antifreeze thermostat. The control enclosure will include a mechanical ventilation system

with thermostatic control (option). Standard single point power connections include main three-phase power to the compressors, condenser fans, and (optional) control power transformer, and (standard) connections are available for the 230 volt single-phase power for freeze protection on the evaporator heaters. All internal cables must be mounted on cable tray and tied. The chillers will have full earth bonding between isolated metal parts.

Control & capacity regulation

Will be via the ClimaticII with a weatherproof LCD crystal backlit display 240 x 128 pixels. Monitoring up to 2050 points Control interface will be via push button and menu screens with graphic icons for simple use
All alarms and fault are in full written display, fault codes are not acceptable

Functions KP02

1. A full screen display of all operating conditions in a graphic layout
2. Status of Pumps graphic display (chilled water, conden ser water and secondary system)
3. Fault history for each refrigeration circuit (last 24 occur rences)
4. Fault history for pumps
5. Hours run
6. Automatic balance of compressor run hours
7. Time clock, day, date for auto scheduling of the chiller
8. Chilled water set point, with programmable predictive PID control
9. Programmable auto reset of chilled water set point based on ambient temperature
10. Programmable condenser fan staging
11. Start and stop of pumps (run and standby)
12. Auto switching if lead pump fails
13. Display of all refrigerant temperature and pressure values, Ambient and Chilled water temperatures
14. Display of timer status (Start and anti recycle)
15. Display of chilled water temperature curve over 24Hrs
16. Adaptive logic to avoid nuisance fault trips
17. General machine faults; chilled water flow, loss of power, freeze protection
18. Refrigeration circuit faults; Hp & Lp and high discharge temperature
19. Compressor faults; Motor temperature, phase protec tion
20. Capacity staging, plus loading delay on start, and predictive control logic
21. Common alarm
22. Fan circuit breaker trip
23. Pump circuit breaker trip
24. Insufficient chilled water flow
25. Programmable temperature difference set point between flow and return water
26. Freeze protection
27. Programmable Minimum and maximum water set point
28. Self diagnostic on sensors and communications
29. Self diagnostic on electronic expansion valves
30. Adaptive Control of Electronic TEV
31. Phase protection
32. Password protection

Functions of the Climatic (KP07 display)

On the High efficiency and Super low noise Climatic II is standard, LCD display is an option

Weatherproof LCD crystal backlight display 240x128 pixels. Monitoring upto 2050 points

Control interface will be via push button and menu screens with graphic icons for simple use

All alarms and fault are in full written display, fault codes are not acceptable.

33. Options for remote control and BMS interface
34. Status of Pumps graphic display (chilled water, condenser water and secondary system)

Refrigerant piping

each refrigerant circuit shall include a factory insulated suction line, manual compressor discharge isolation valve, manual liquid line isolation valve with charging connection; a replaceable core refrigerant filter drier, sensor indicator, electronic thermostatic expansion valve, and 27 bar relief valve. All refrigerant pipework must be clamped to prevent vibration and all small-bore lines should be high pressure plastic with aircraft type fittings. The refrigerant lines should contain independent Schrader valve test points for maintenance.

Electronic expansion valve

On all units - each refrigerant circuit will be equipped with an electronic expansion valve working with a "PID" system, this type of system allows a control system that quickly interacts at load variations. This valve combines two functions as a liquid solenoid and electronic expansion valve. It shall be managed directly by the ClimaticII microprocessor

BELGIUM :
LENNOX BENELUX N.V./S.A.
tél. : + 32 3 633 30 45
fax : + 32 3 633 00 89
e-mail : info.be@lennoxbenelux.com

CZECH REPUBLIC :
LENNOX JANKA
tél. : + 420 2 510 88 111
fax : + 420 2 579 10 393
e-mail : janka@janka.cz

FRANCE :
LENNOX FRANCE
tél. : + 33 4 72 23 20 20
fax : + 33 4 78 20 07 76
e-mail : accueil@lennoxfrance.com

GERMANY :
LENNOX DEUTSCHLAND GmbH
tél. : + 49 69 42 09 79 0
fax : + 49 69 42 09 79 40
e-mail : info.de@lennoxdeutschland.com

MIDDLE EAST :
LENNOX DISTRIBUTION
tél. : + 971 4 262 9309
fax : + 971 4 266 7082
e-fax : + 1 240 368 73 62
Mobile : 971 50 4510669
e-mail : mmrifal@emirates.net.ae

NETHERLANDS :
LENNOX BENELUX B.V.
tél. : + 31 33 2471 800
fax : + 31 33 2459 220
e-mail : info@lennoxbenelux.com

POLAND :
LENNOX POLSKA Sp. z o. o.
tél. : + 48 22 832 26 61
fax : + 48 22 832 26 62
e-mail : lennoxpolska@inetia.pl

PORTUGAL :
LENNOX CLIMATIZAÇAO LDA.
tél. : +351 22 999 84 60
fax : +351 22 999 84 68
e-mail : info@lennoxportugal.com

RUSSIA :
LENNOX DISTRIBUTION MOSCOW
tél. : + 7 095 246 07 46
fax : + 7 502 933 29 55
e-mail : lennox.dist.moscow@mtu-net.ru

SLOVAKIA :
LENNOX SLOVAKIA
tél. : + 421 2 44 87 19 27
fax : + 421 2 44 88 64 72

SPAIN :
LENNOX REFAC S.A.
tél. : + 34 915 40 18 10
fax : + 34 915 42 84 04
e-mail : marketing@lennox-refac.com

UKRAINE :
LENNOX DISTRIBUTION KIEV
tél. : + 380 44 213 14 21
fax : + 380 44 213 14 21
e-mail : jankauk@uct.kiev.ua

UNITED KINGDOM :
LENNOX INDUSTRIES LTD
tél. : + 44 1604 599400
fax : + 44 1604 594200
e-mail : ukmarketing@lennoxind.com

OTHER EUROPEAN COUNTRIES, AFRICA, LENNOX DISTRIBUTION :
tél. : + 33 4 72 23 20 14
fax : + 33 4 72 23 20 28
e-mail : marketing@lennoxdist.com

LENNOX®

www.Lennoxeurope.com

ECOMAX P
AGU ECO-V -0402