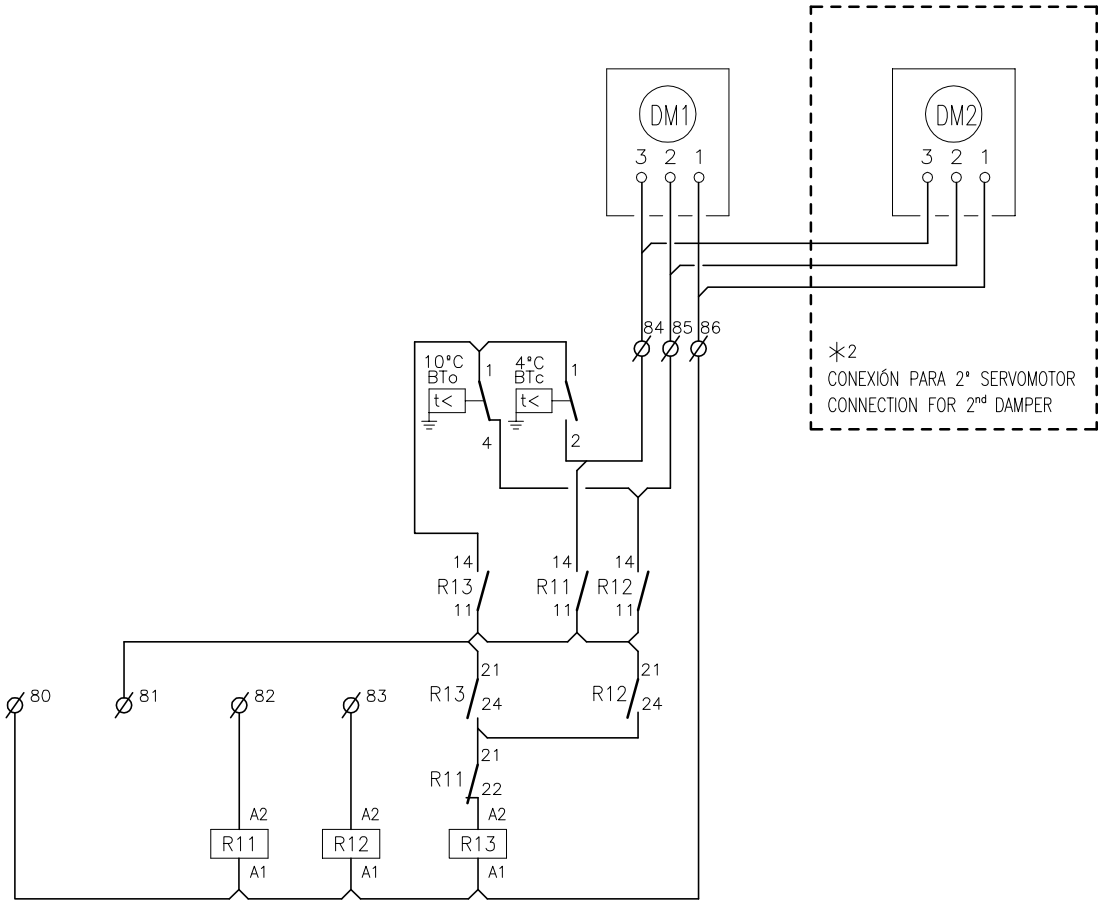

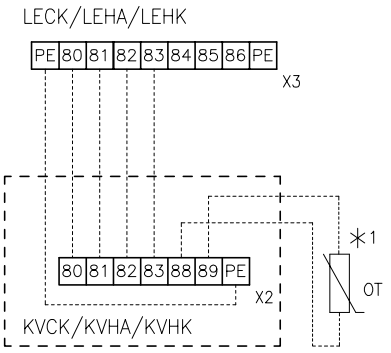

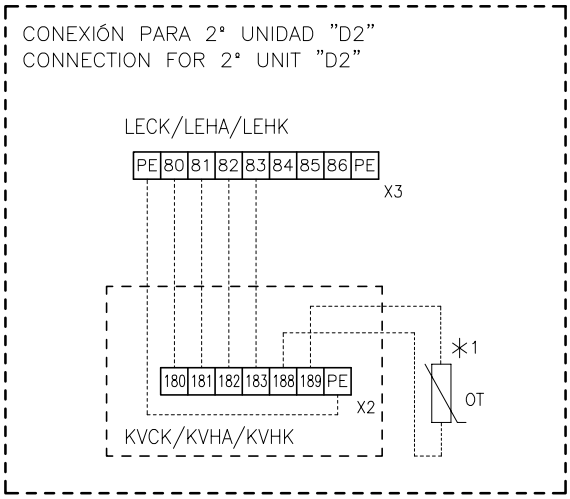

∗1 Excepto LVHA/K 22E–24E–28E–32E–38E

∗1 Excepto LVHA/K 44D2–48D2–56D2–64D2–76D2–86D2–100D2

∗2 Con LVHA/K 2 servomotores. Cambiar secuencia de giro en DM2

BTo	Termostato de descarga	Discharge thermostat
BTc	Termostato de descarga	Discharge thermostat
DM	Servomotor	Damper
OT	Sonda Exterior	Outdoor Sensor
R	Relay	Rele

Lennox Refac S.A.	ESQUEMA ELECTRICO ELECTRIC DIAGRAM	FREE COOLING LVCK/LVHA/LVHK	4Z–33–475–316 28E 1 ∿230V 50HZ + PE