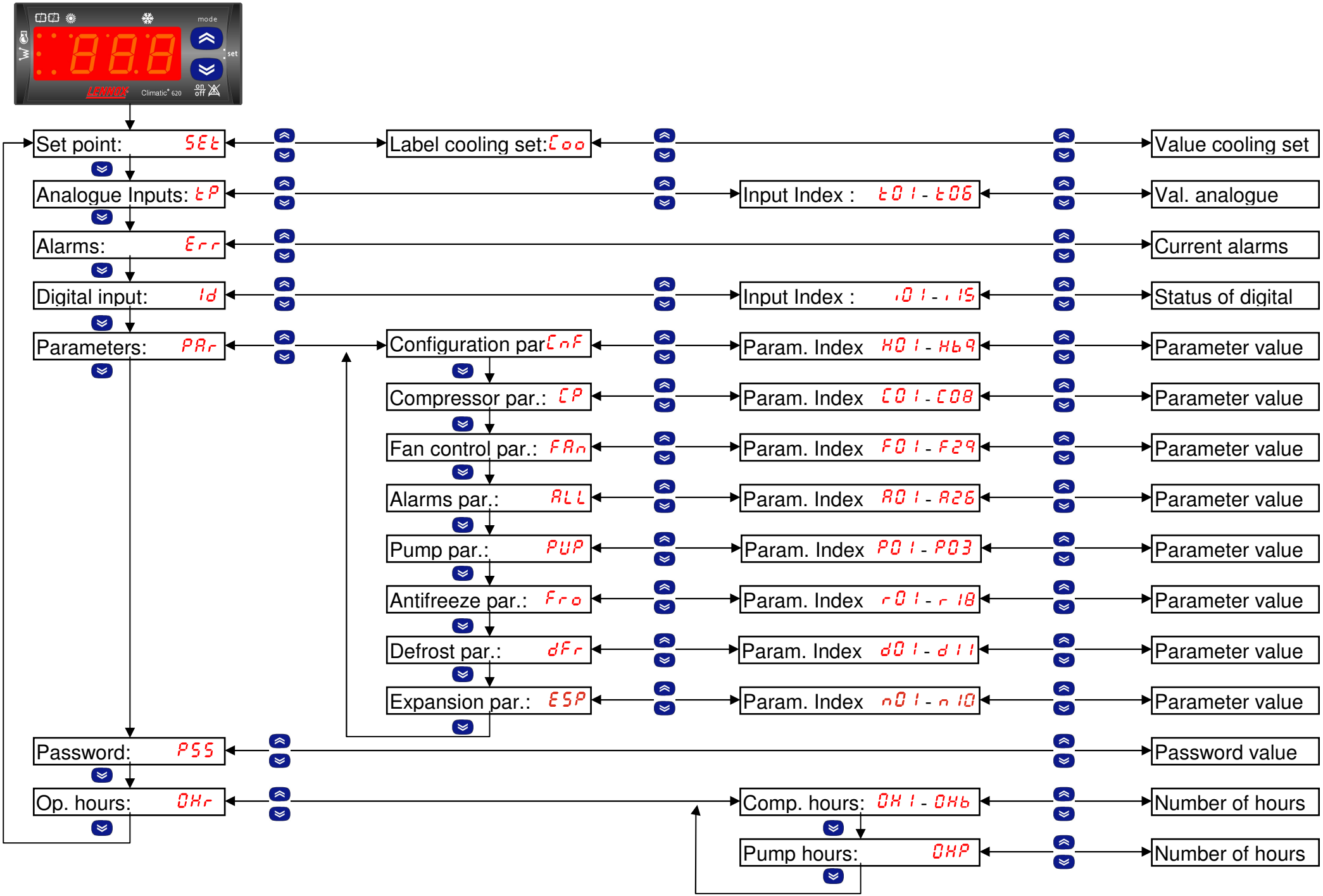
mode
set
LENNOX
Climatic® 620
on
off
Set point: SEt
Label cooling set: Coo
Value cooling set
Analogue Inputs: tP
Input Index : t01 - t06
Val. analogue
Alarms: Err
Current alarms
Digital input: Id
Input Index : i01 - i15
Status of digital
Parameters: PAr
Configuration par CnF
Param. Index H01 - H69
Parameter value
Compressor par.: CP
Param. Index C01 - C08
Parameter value
Fan control par.: FAn
Param. Index F01 - F29
Parameter value
Alarms par.: ALL
Param. Index A01 - A26
Parameter value
Pump par.: PUP
Param. Index P01 - P03
Parameter value
Antifreeze par.: Fro
Param. Index r01 - r18
Parameter value
Defrost par.: dFr
Param. Index d01 - d11
Parameter value
Expansion par.: ESP
Param. Index n01 - n10
Parameter value
Password: PSS
Password value
Op. hours: OHr
Comp. hours: OH1 - OH6
Number of hours
Pump hours: OHP
Number of hours