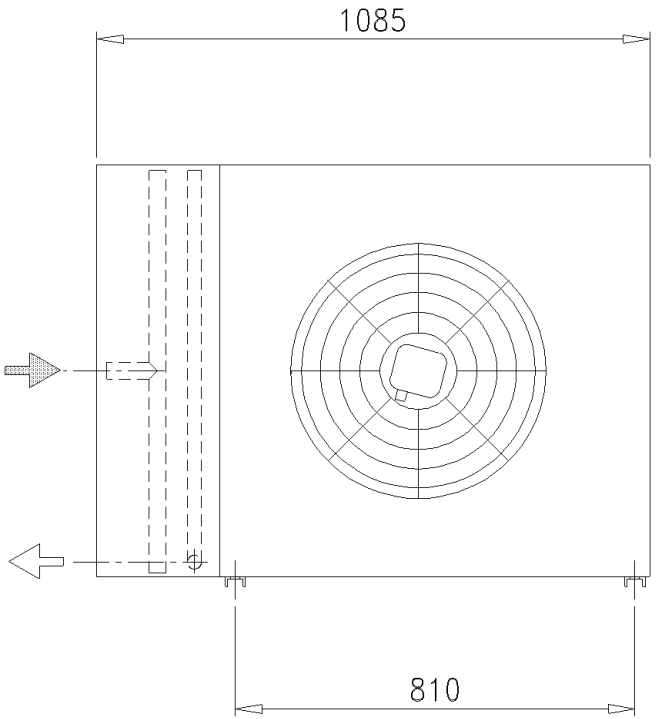

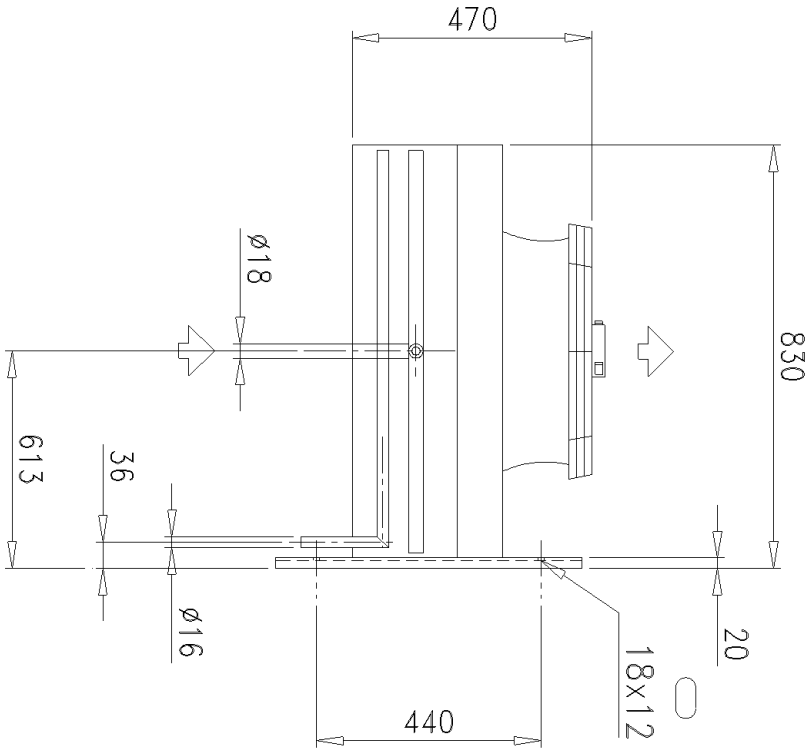

Date 17-09-2008	Type: SAV5R 4510 1V Code: 082145021
Scale 1:15	LU-VE CONTARDO®